2018 FALL WORKSHOP

Gas Turbine Energy Systems:
Clean and Reliable Energy on Demand

October 23, 2018 | Ottawa

TRAINING SESSION 1
GAS TURBINE BASICS, UNIT TYPES, APPLICATIONS & PRICING

*An introduction to the basics of the industrial **Gas Turbine***
- heavy-duty and aero-derivative units
- the gas turbine generator package
- the auxiliaries
for the cogeneration, combined-cycle or peaking power plant; or for repowering.

Jim Noordermeer, P.Eng.
Noord Power Consulting Inc.

Presented at the 2018 Gas Turbines for Energy Network (GTEN) Fall Workshop in Ottawa – October 2018.

GAS TURBINE CONCEPTS

The Basic Thermodynamic Gas Turbine Cycle

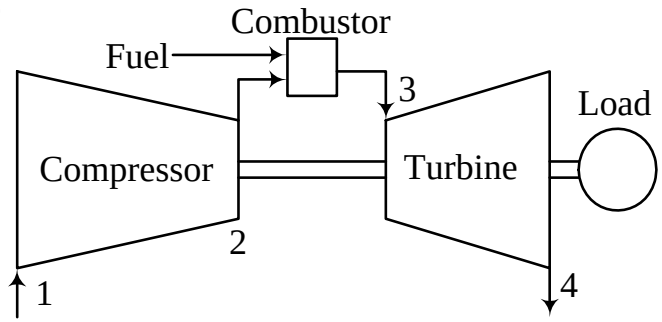

Brayton Cycle – a continuously operating process using air as the working fluid, moving through State Points:

- Air Intake (State 1): *ambient air enters the unit*
- Continuous compression (States 1 to 2): *the compressor requires power*
- Continuous fuel combustion (States 2 to 3): *which adds heat and small % of mass flow at relatively constant pressure*
- Expansion back to atmospheric pressure (States 3 to 4): *with the turbine making shaft power and driving the compressor and a load (or jet thrust via a nozzle per the below illustration)*

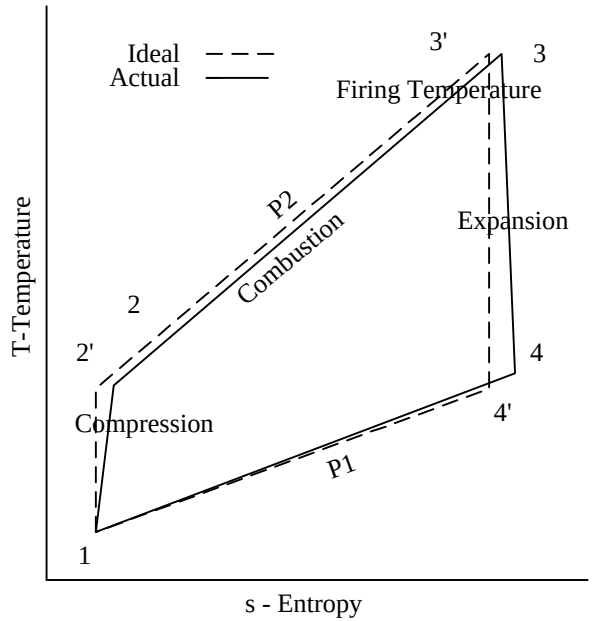

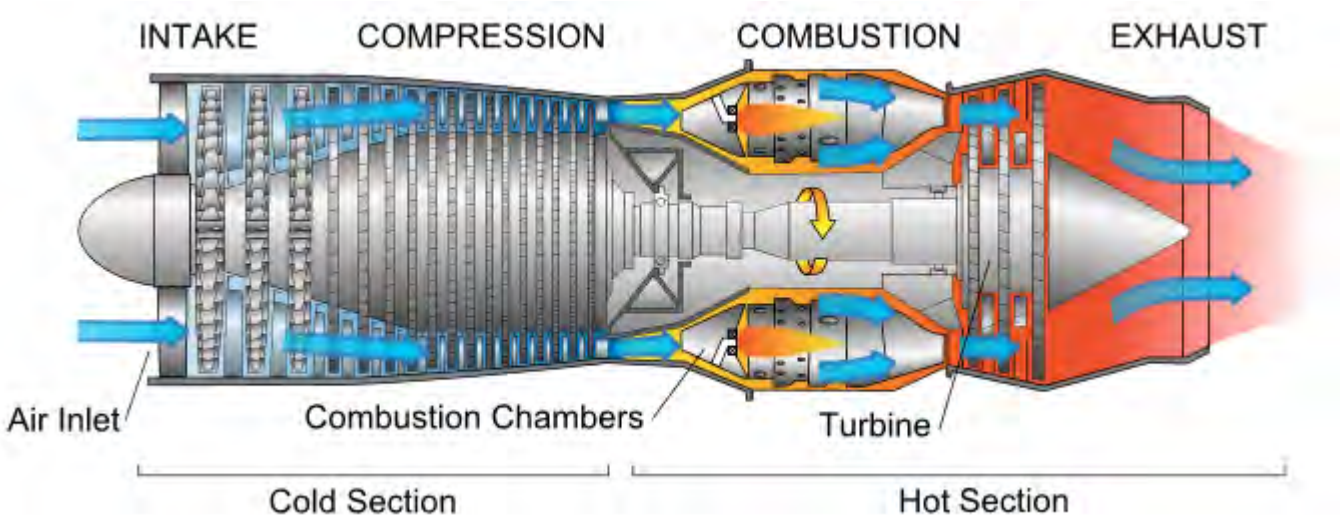

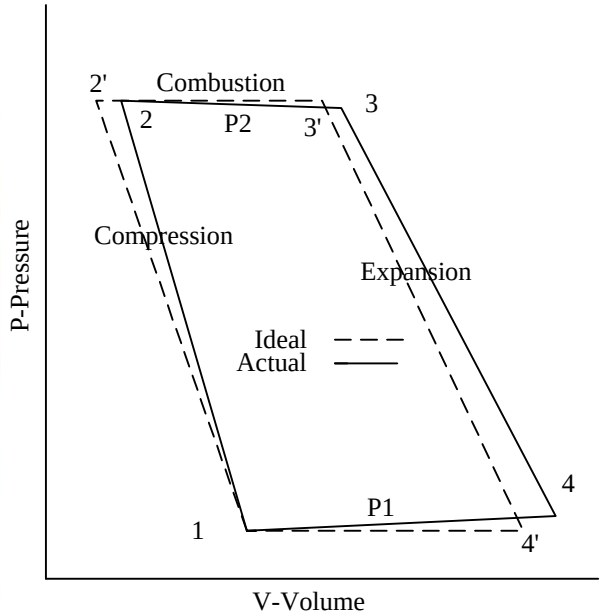

Mechanical Operating Principles

Turbine Section (hot-section) and it's power output physically drives (rotates) the **Compressor Section** (cold-section) which needs power to operate.

Excess Turbine Shaft Power drives the load – generator (or mechanical-drive pump/compressor)

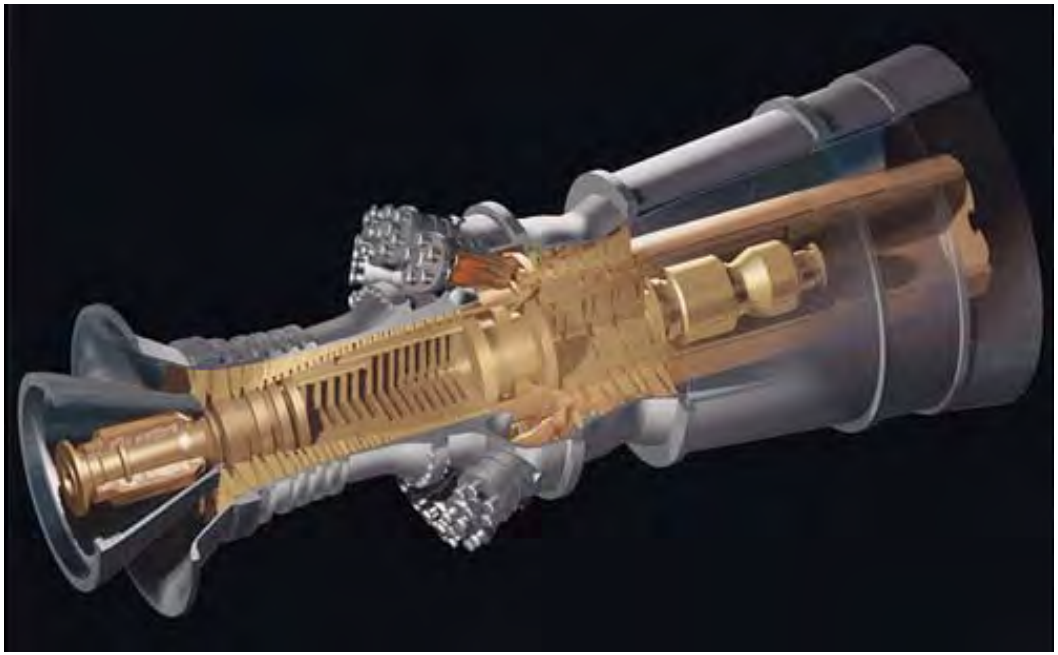

Firing Temperature

Firing Temperatures (T3): over time, have climbed from 1400 deg F to 2000~2200 and now 2600 F and beyond with better turbine section materials, coatings and cooling methods

High T3 = improves power output & efficiency.

Pressure Ratio

Pressure Ratio (P2/P1); high ratio = high efficiency & specific output (hp/lb/sec).

Gas turbine design pressure ratios vary:
- 7.5:1 – smaller & older technology GT's,
- 35:1 ~ 40:1 – recent, most advanced GT's.

Aircraft "**Jet Engines**" are also "Gas Turbines"

- **Jet Engines**: propulsion via change in DeltaV / momentum
- **Turboprops Engines**: propulsion via propellors
- **Low-Bypass & High-Bypass Turbofan Engines**: propulsion via large Fans and jet DeltaV

All generally use high pressure ratio & high firing temperature = minimum weight & frontal area.

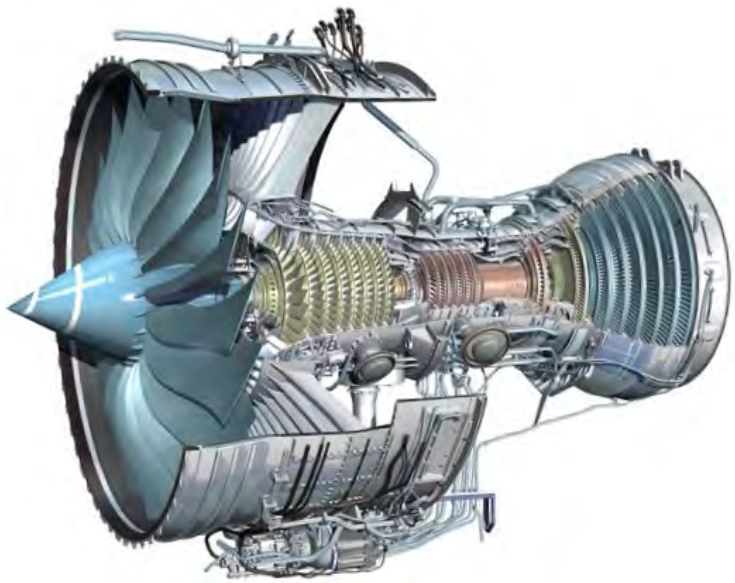

Turbine Cycle Variations – of the "Basic Cycle":

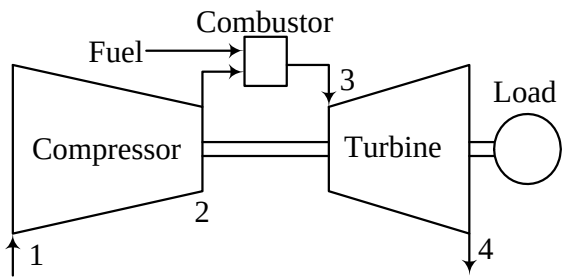

Basic Cycle

Reheat or Sequential Combustion – used in high-pressure ratio GT's.

Hot HP Turbine Section gases are reheated by combustion of additional fuel (3a).

Reheated gases enter into LP turbine section (3a to 4).

The reheat configuration:

- Increases LP Turbine output (fired to a similar temperature as T3)
- Raises the turbine's final exhaust temperature (good for HRSGs)
- Increases simple-cycle power output
- Increases combined-cycle power output (HRSG and STG)

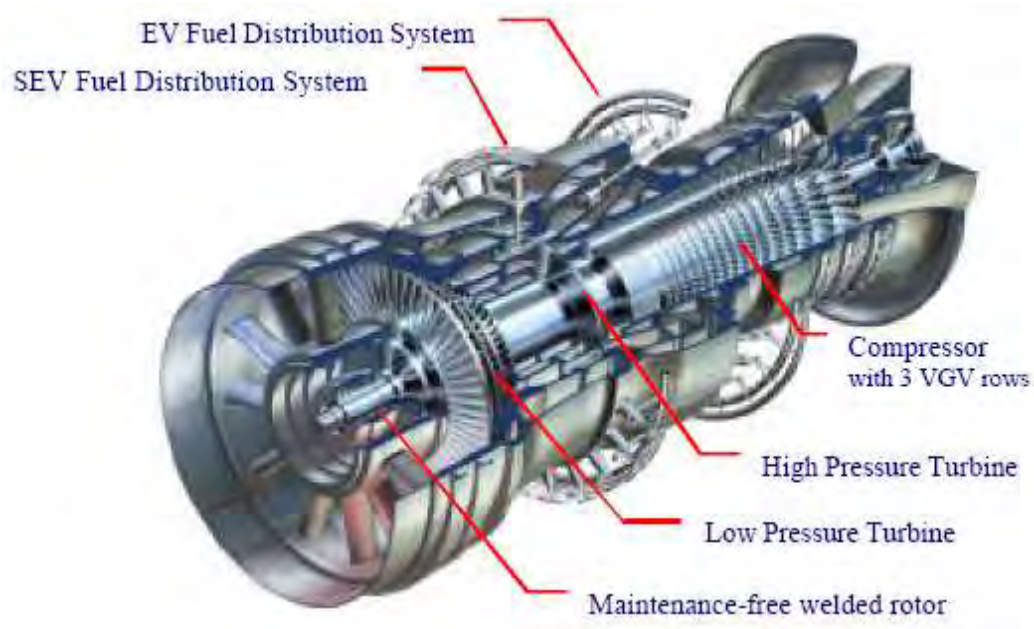

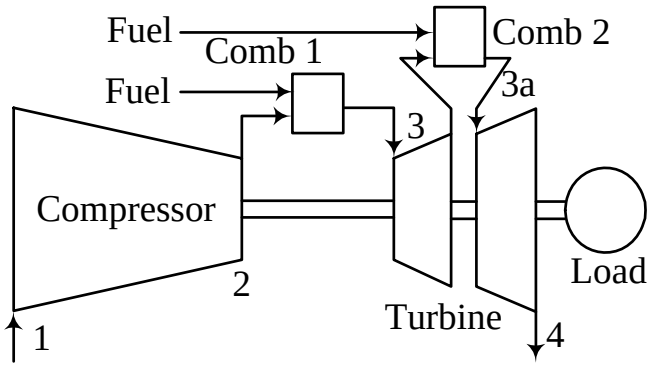

Example: ***GE-Alstom GT24/26***.

Turbine Cycle Variations – of the basic cycle:

Recuperated or Regenerated Gas Turbines

Generally for low-pressure ratio units with high firing temperatures.

An external regenerative heat-exchanger transfers heat from the turbine exhaust to the compressor discharge air (before fuel is introduced).

Regenerative Configuration:

- Saves fuel
- Increases efficiency
- Low exhaust energy

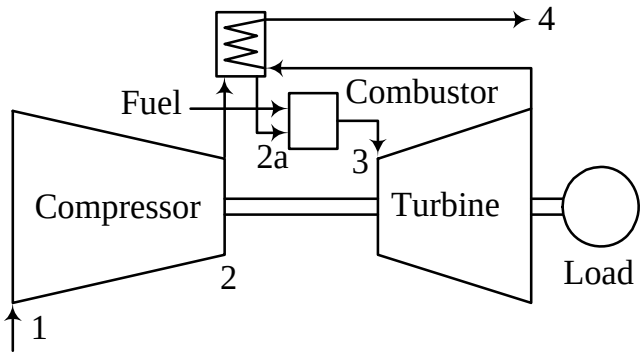

Examples: ***Solar Mercury 50 / Abrams M1 / Micro-Turbines***

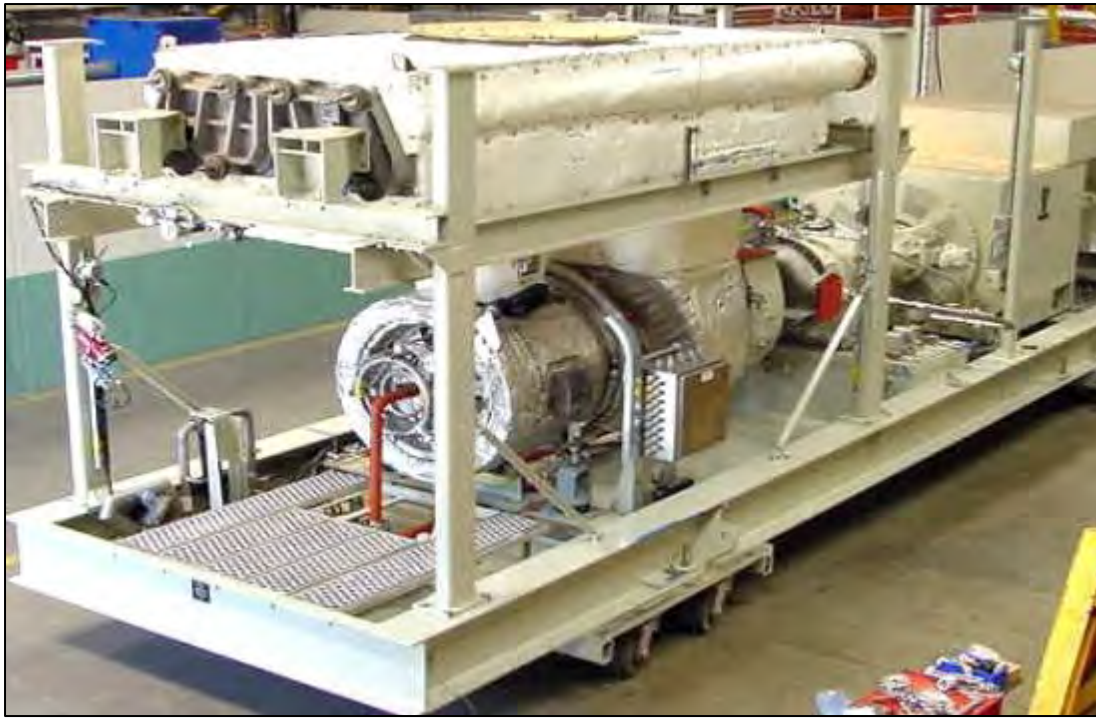

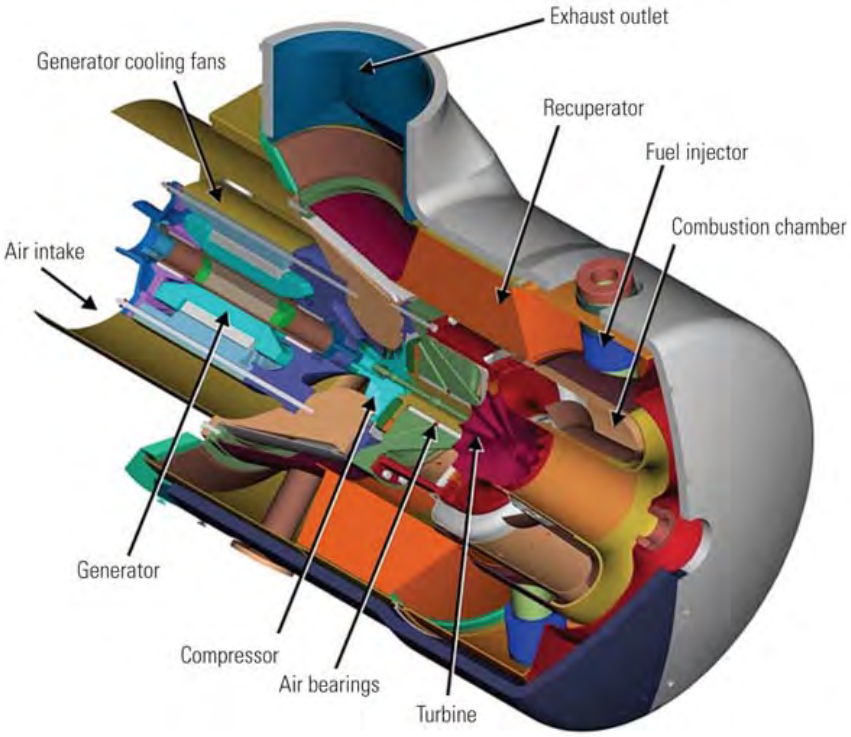

Turbine Cycle Variations – of the basic cycle:

Inter-Cooled Gas Turbines

For high-pressure ratio multi-shaft GT units.

LP compressor air is directed to an external heat exchanger.

Cooling medium (water or air) decreases air temperature and increases flow density. The cooled air re-enters the HP compressor.

Intercooled Configuration:

- decreases HP compressor power
- improves efficiency & specific output

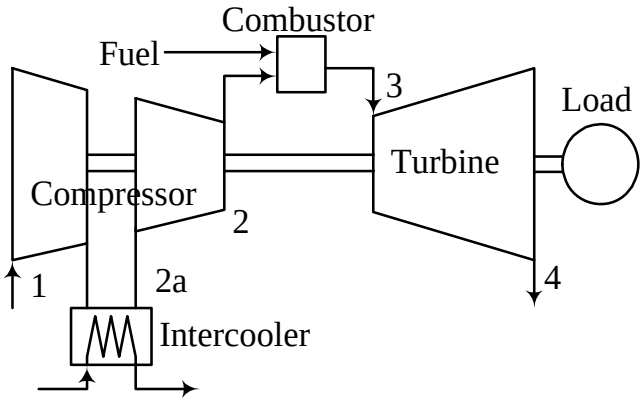

Example: ***100 MW GE LMS100****, w/ air or water cooling.*

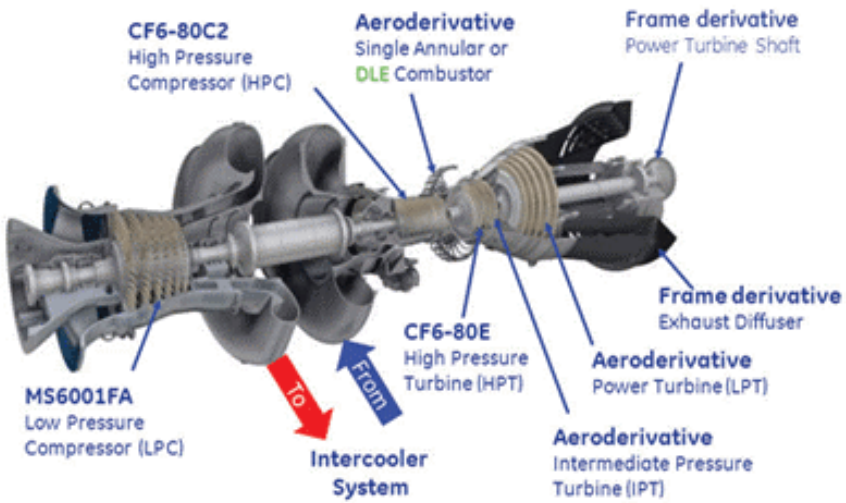

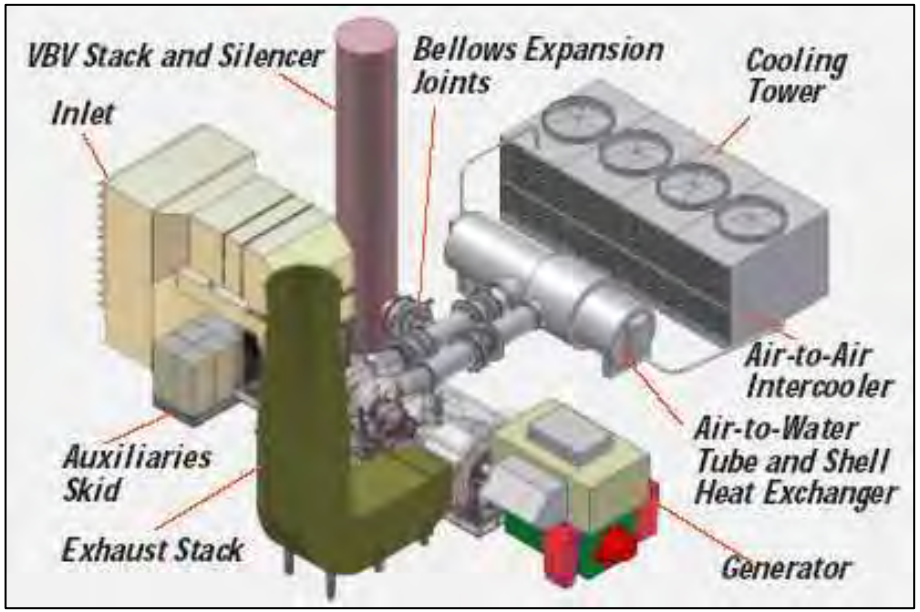

Turbine Cycle Variations – of the basic cycle:

Spraywater Cooling – similar to intercooling, evaporative cooling and/or fogging

Very clean water injected before the LP compressor, and between the LP & HP LM6000 compressor sections of the multi-shaft aero-derivative ***GE LM6000 Sprint***. Systems are also available on ISI versions of the ***Siemens / Rolls-Royce Trent***.

- Increases HPC mass flow
- Increased pressure ratio
- Increased power output & efficiency @ high ambients

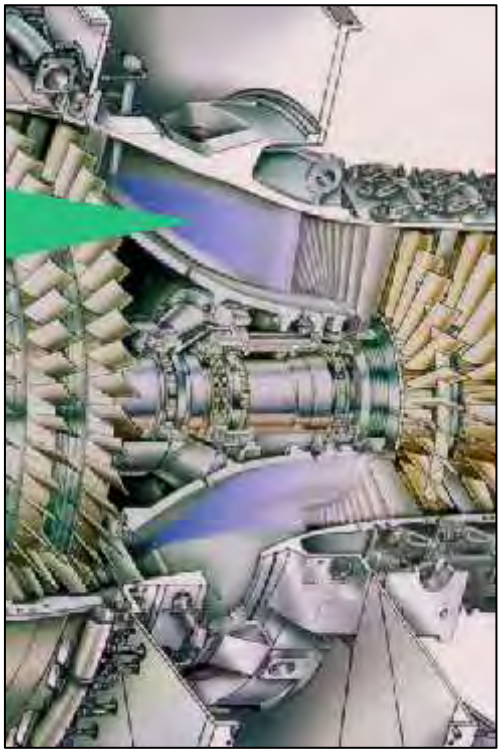

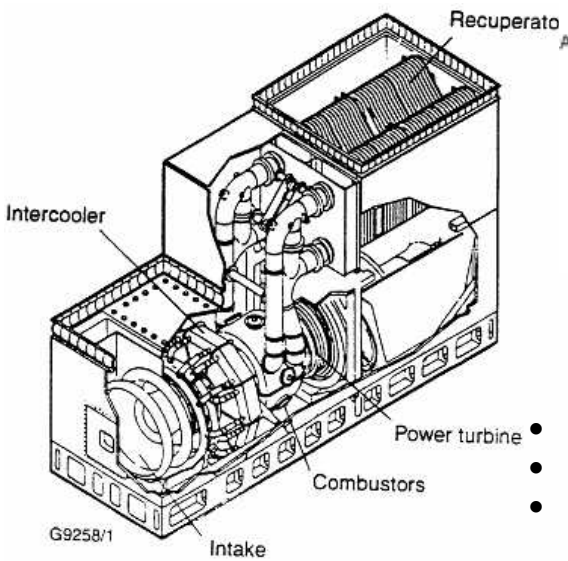

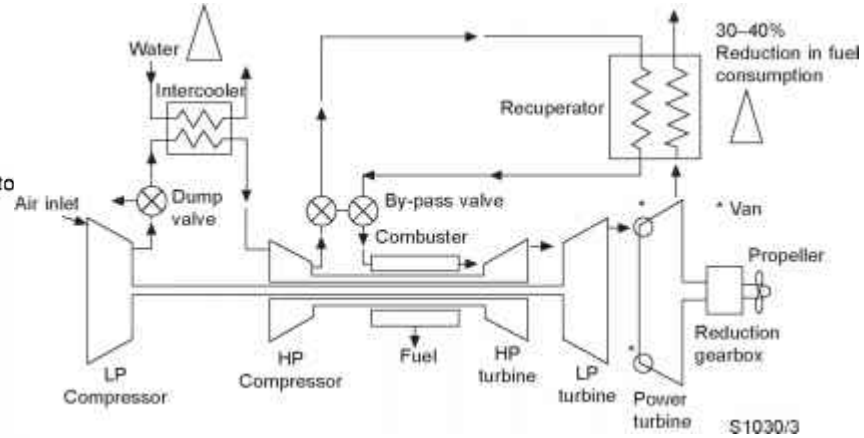

Intercooled & Recuperated Gas Turbine
Rolls-Royce WR-21 marine drive unit.

- Special high-efficiency configuration.
- Exhaust recuperator & sea-water cooled intercooler.
- For interest only - there are no land applications (other than possibly trains).

Basic Components of the Gas Turbine

Compressor Section:

Usually multi-stage axial configurations, or centrifugal in the smallest units.

Each stage consists of a row of stationary blades (stators) & rotating blades.

Pivoted-variable inlet guide vanes (IGV's) – industrial & aero-derivative units - manage bulk inlet air flow.

Outlet guide vanes (OGV) & diffuser – straighten & slow air stream prior to entry into the combustor section.

Compressed air is bled out & used for cooling purposes in hot sections.

Compressor air is bled out for startup (to prevent surge) and part-load operation and/or dry low-NOx control

IGV's sometimes manipulated to keep exhaust temperatures high for cogeneration or combined-cycle steam generation considerations.

Many aero-derivative units employ variable stator vanes (VSV) to control air flow and rotor speed in the higher-pressure section.

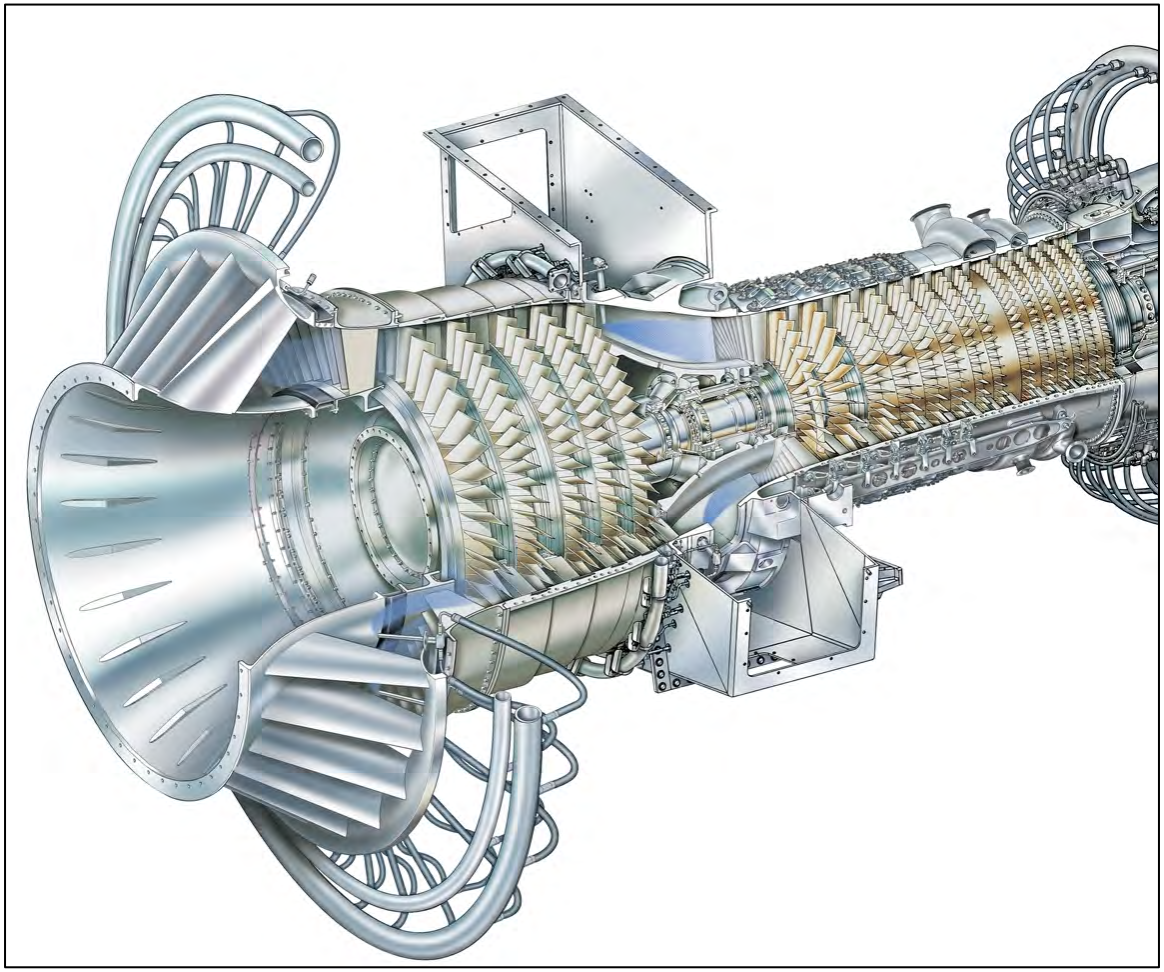

LM6000 Compressor *with variable bleed valves (VBV), IGV's and VSV's*
Courtesy of GE Energy

Basic Components of the Gas Turbine

Combustor Section:

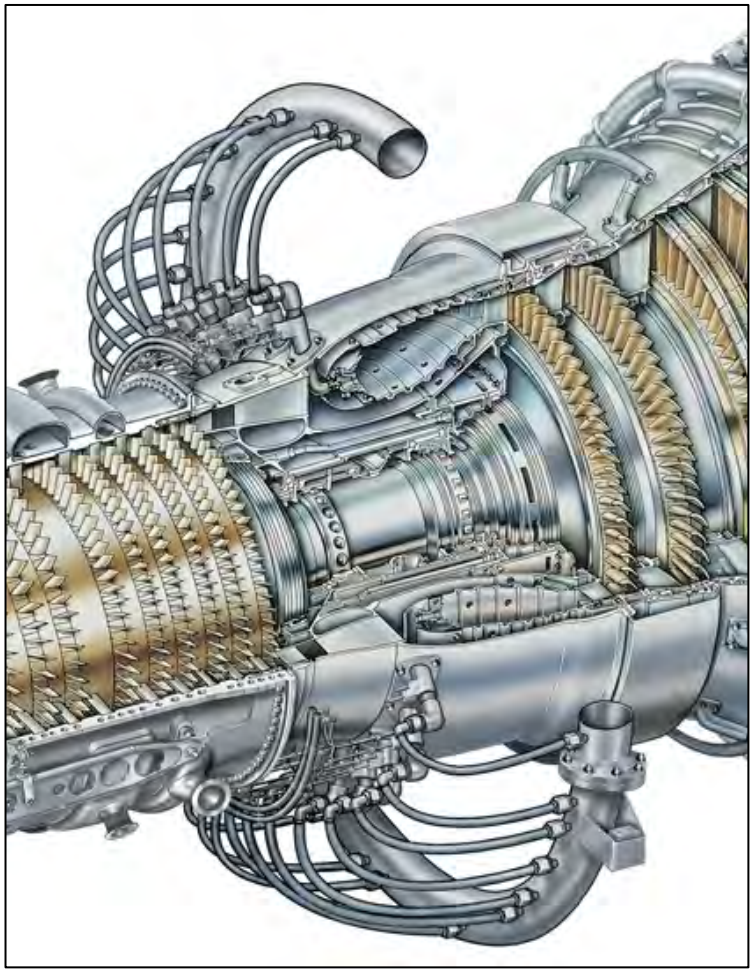

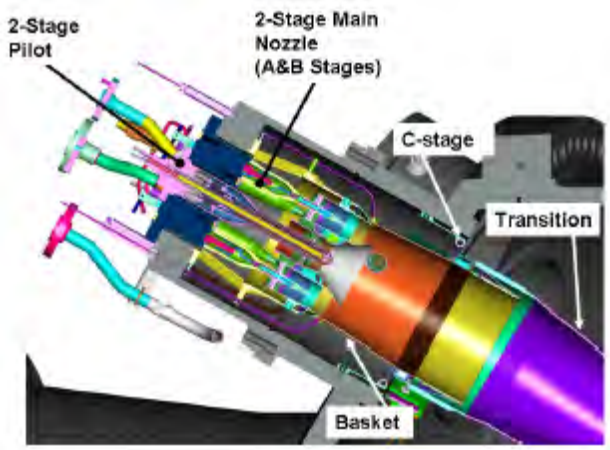

Generally multi-can (basket) design or annular-ring design

For standard diffusion-combustion systems (i.e. non dry low-NOx), gaseous or liquid fuels introduced via nozzles located at the head of each combustor can, or front of combustion annulus chamber.

Portion of compressor air introduced directly into the combustion reaction zone (flame); remainder introduced afterwards – for flame shaping and quenching to T3.

Water or steam injection: for environmental or power enhancement

Transition ducts / liners - carefully shape the hot gases for the turbine section

Fuel, steam and/or water injection manifolds & hoses around the combustor section circumference.

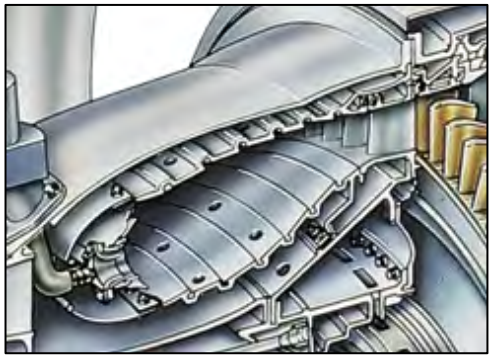

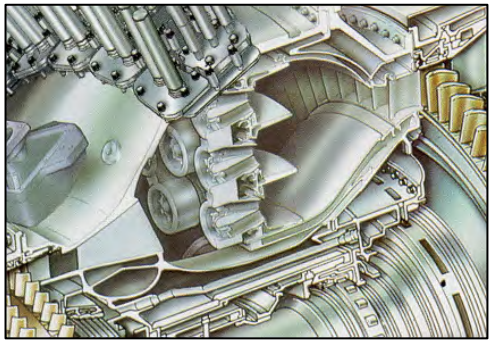

Current generation dry low-NOx (DLN or DLE) combustion systems use lean pre-mix principle, frequently multi-nozzle (Siemens Ultra Low-NOx and GE LM shown).

Basic Components of the Gas Turbine

Turbine Section:

Usually multi-stage axial design.

Each stage includes a stationary nozzle row which imparts correct angle to hot gases, for succeeding rotating blades.

The most critical section of turbine = 1st few stages.

Nozzle & rotating blade exposed to “red-hot” gases at design firing temperature – far in excess of acceptable creep-fatigue limits for engineered alloys employed.

Plus, the rotating blade is required to survive under high centrifugal & mechanical stresses.

Internal cooling passages are cast and machined into nozzles & blade.

Raw or cooled compressor bleed air (and some units employ steam) is passed through to maintain material temperatures at acceptable limits.

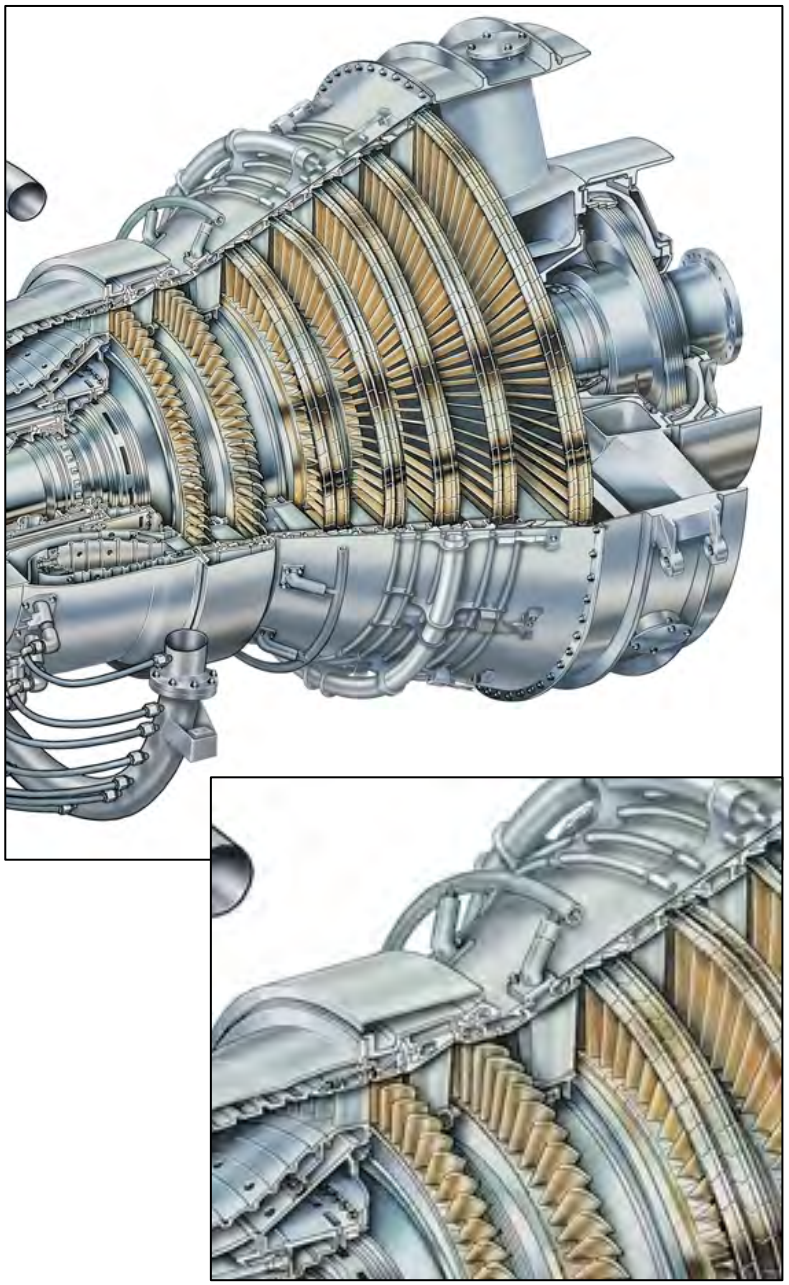

Turbine Section Blades & Discs:

Creep-resistant directionally-solidified (DS) & single-crystal (SC) blade production technology – introduced from the aircraft / jet gas turbine world.

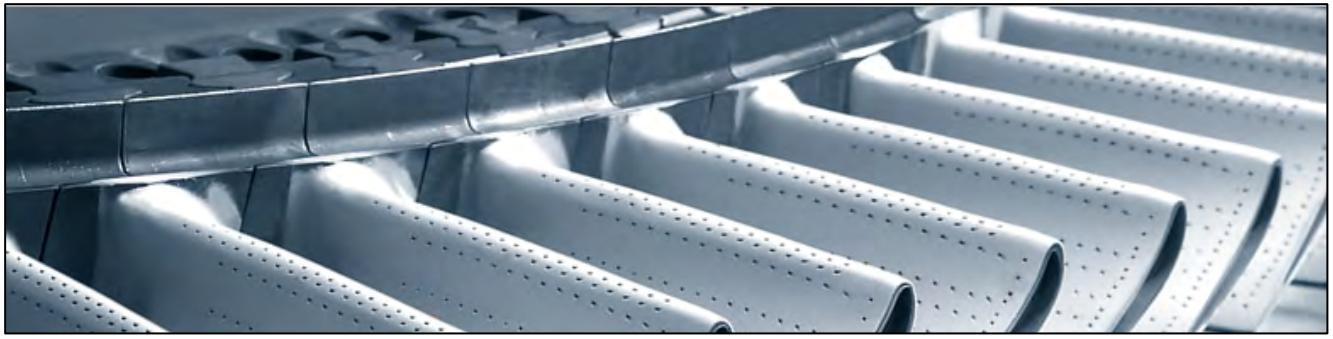

Thermal barrier coatings (TBC) employed to protect aerodynamic surfaces & materials from corrosion, oxidization and erosion.

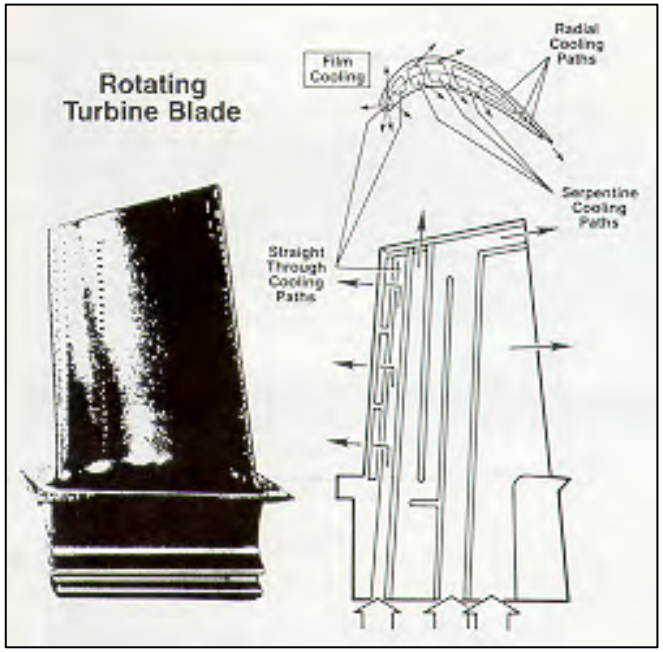

Turbine Section Stationary Sections:

Turbine row assembly, showing blade attachments to the rotating disk, and blade cooling air exit holes

Turbine Nozzle w/ TBC & cooling air exit holes

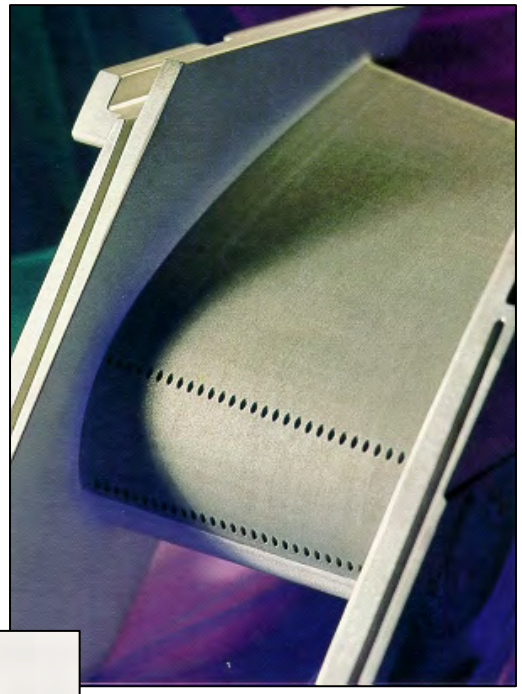

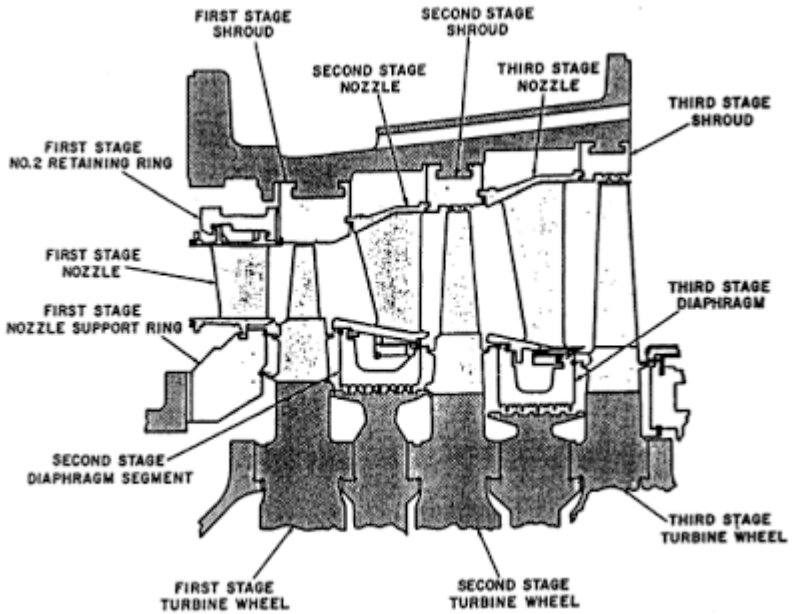

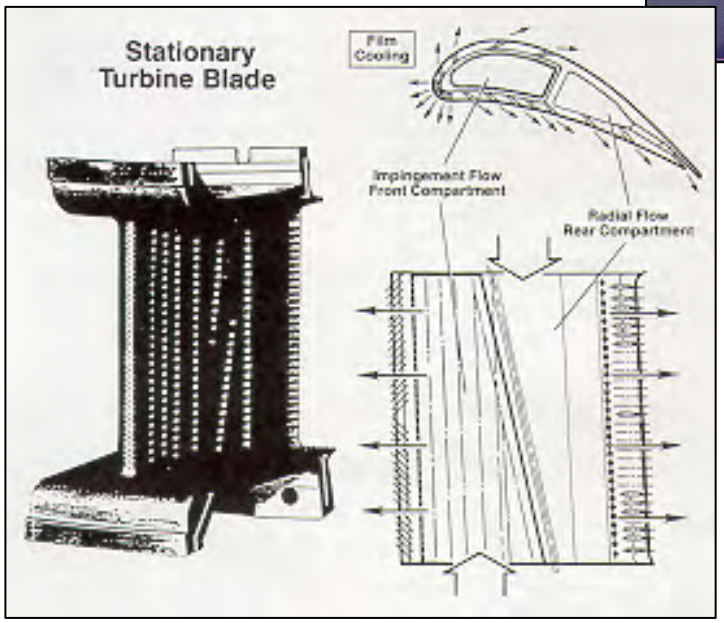

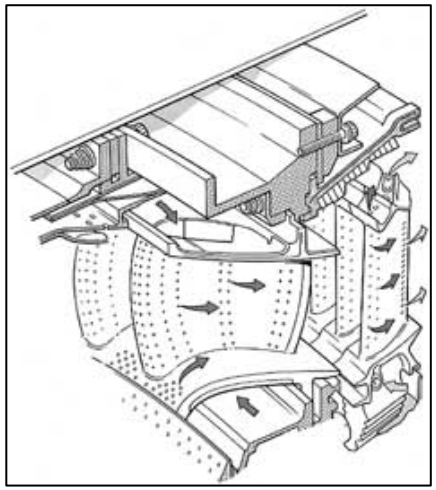

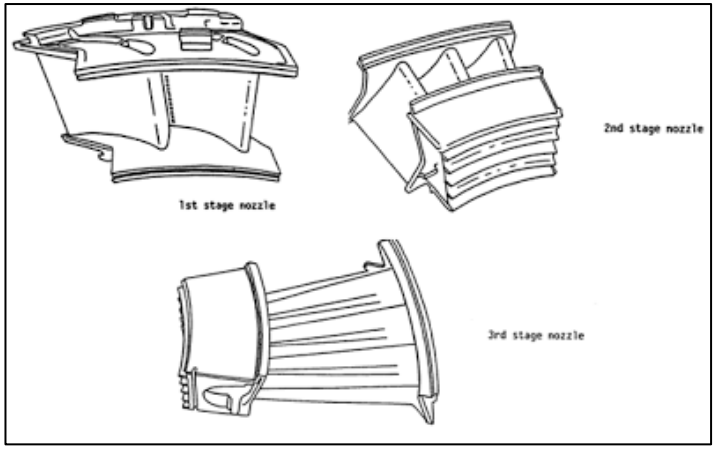

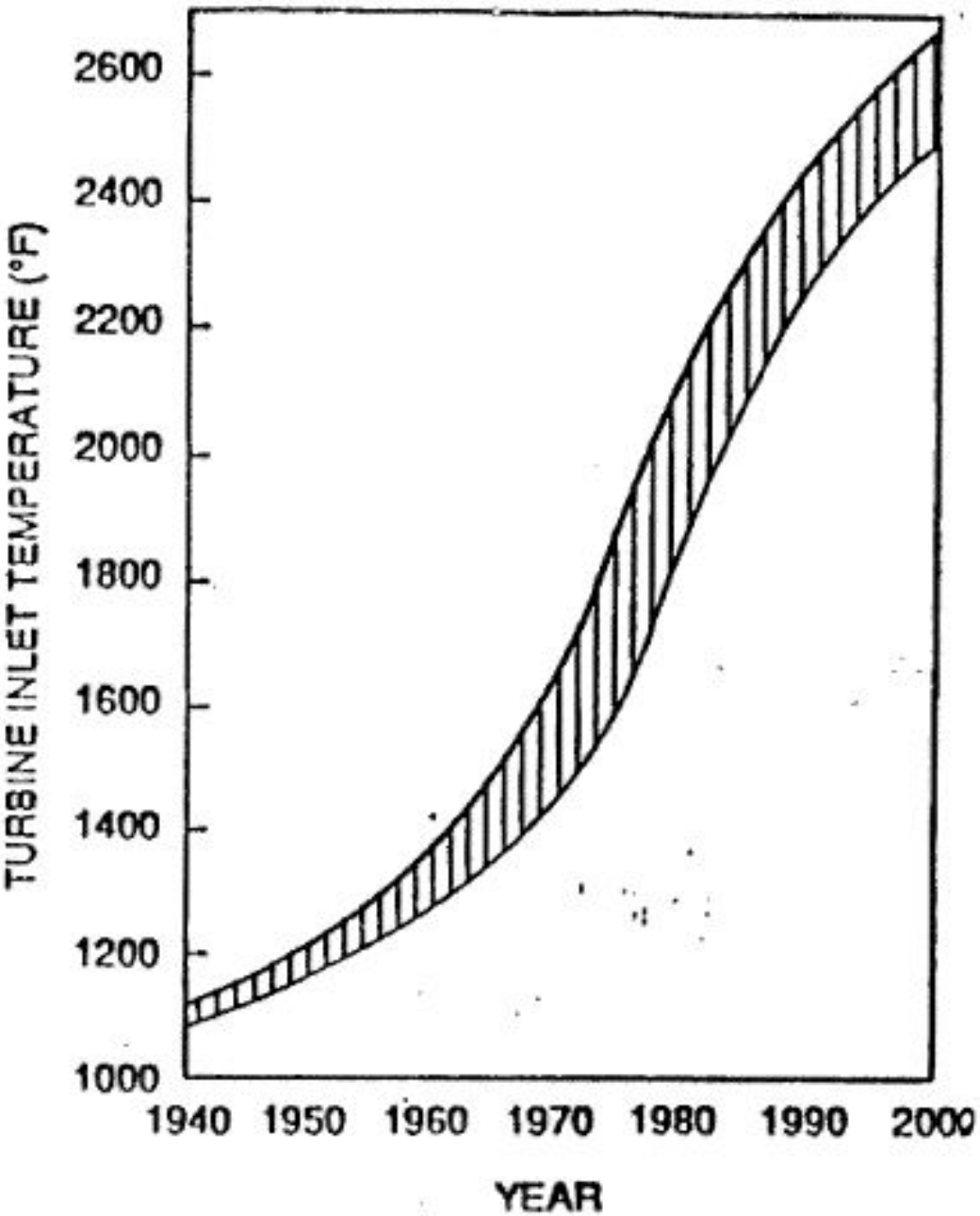

Gas Turbine Inlet Temperature Trend

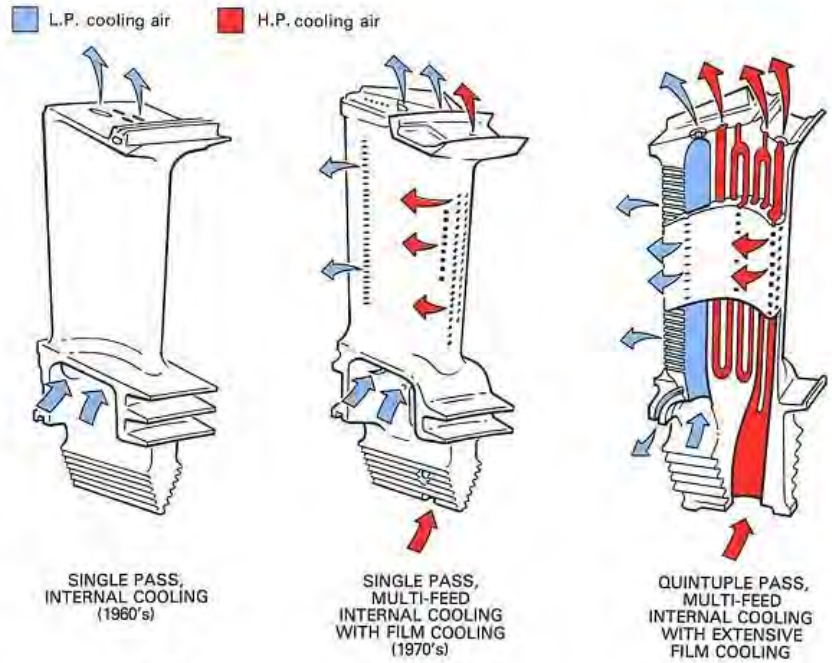

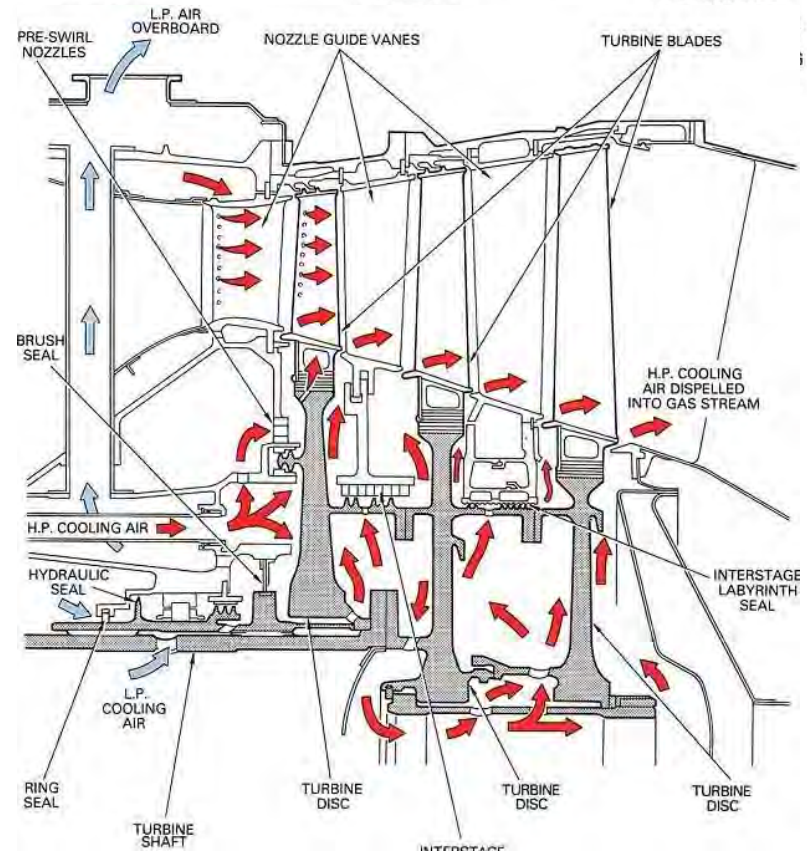

THE GAS TURBINE ASSEMBLY (i.e. let's put the sections together)

The Basic Gas Turbine Machine

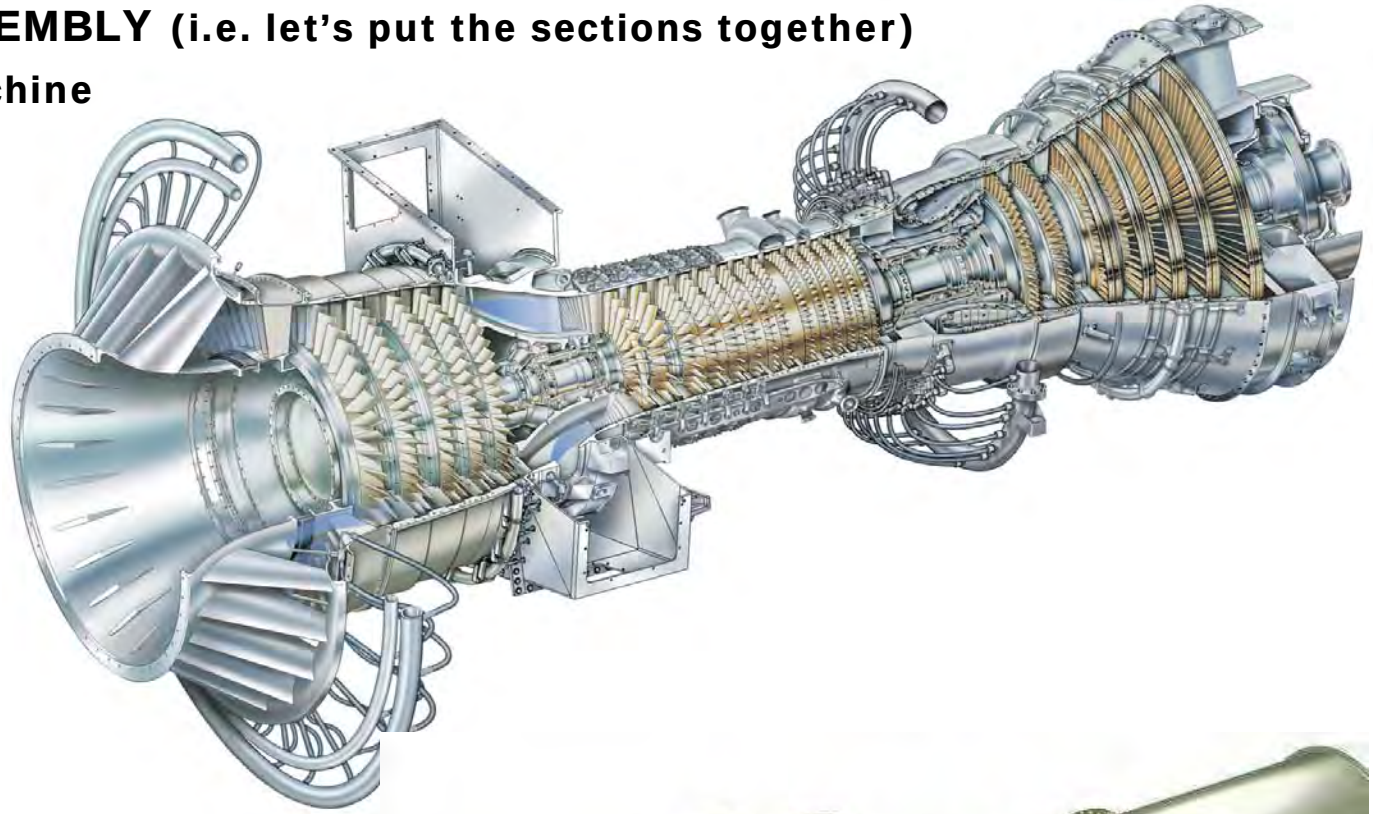

Individual **Compressor**, **Combustor** & **Turbine** sections and their **casings** are bolted together.

Supported via struts & baseplates - to make a complete **machine**.

Rotating compressor & turbine sections mechanically interconnected.

Compression power is provided by turbine section's power output. Excess turbine shaft power drives pump, compressor or generator via output shaft:

- Cold-end drive
- Hot-end drive

The 2/3 to 1/3 "Rule of Thumb"

60~70% of the Turbine Section's power output is used by the Compressor Section to drive it

The remaining 30~40% available as true shaft output power, e.g. a typical nominal 50 MW single-shaft industrial gas turbine produces ~150 MW in the turbine section, gives ~100 MW to the compressor section, and has 50 MW left to run a generator

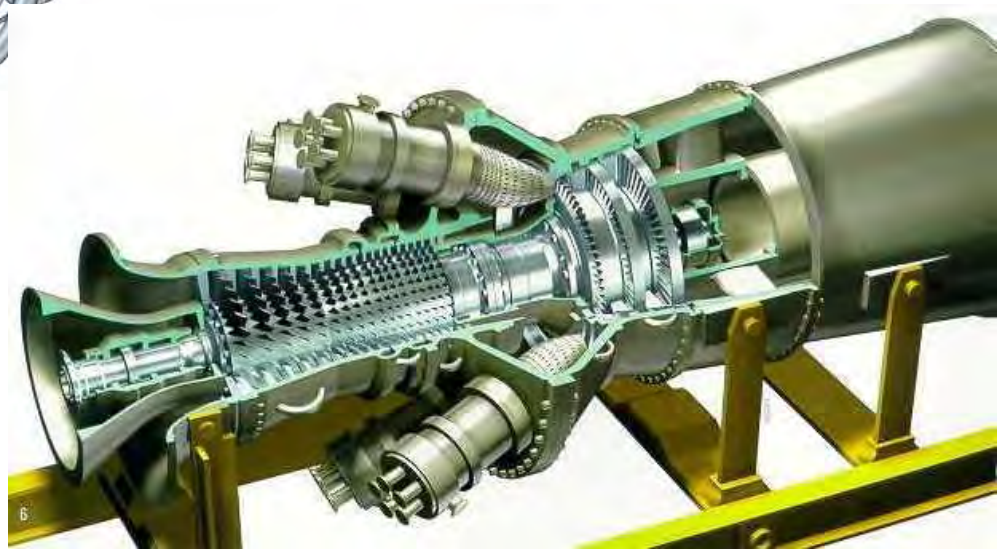

F-Class Gas Turbine Assembly
(175~225 MW)

Top-Half removed –
multi-stage compressor with IGVs, multi-can combustor with baskets, multi-stage turbine section and exhaust diffuser

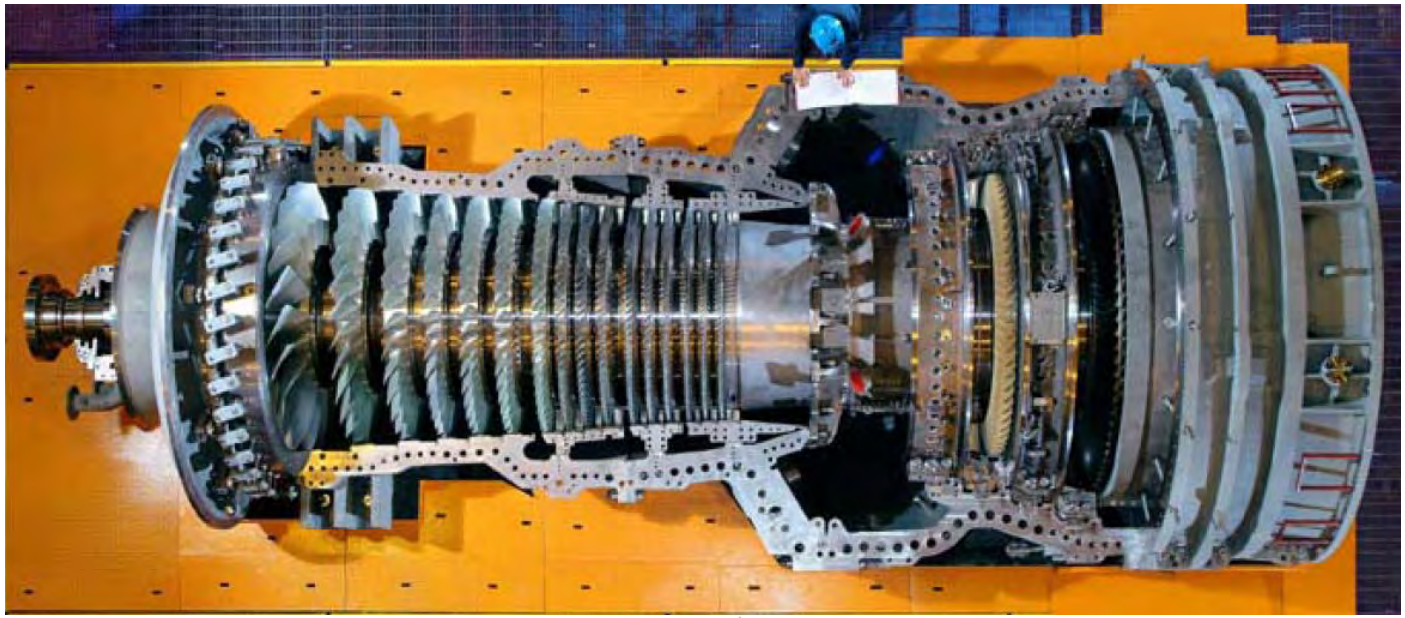

Longitudinal Assembly Drawing
Cold-End drive

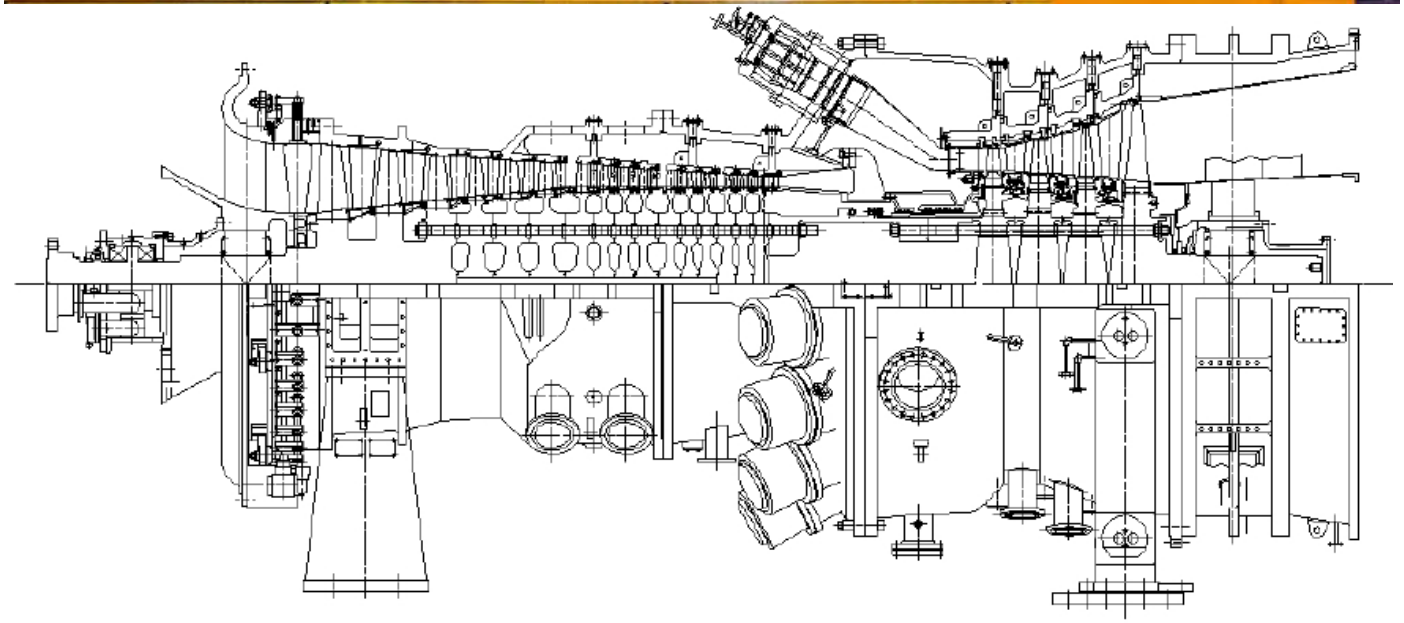

Gas Turbine Variations – from the single-shaft design

Single-Shaft with PT – industrial & aero-derivative units

A single-shaft GT operates at the speed and firing temperature to keep itself self-sustained (frequently called a "jet", or "gas-generator", for convenience).

The jet's exhaust gases pass to an aerodynamic-coupled free power turbine (PT) which drives the load – at fixed (generator) or variable (mechanical drive) speed.

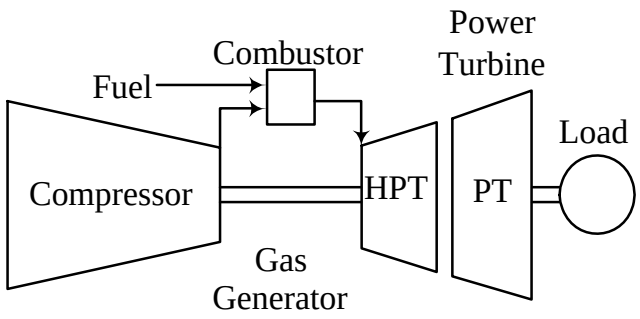

Multi-shaft, with & without PT

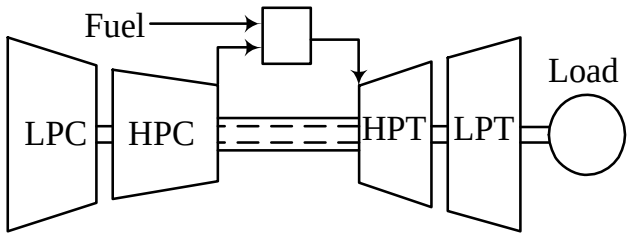

Industrial units designed for variable-speed mechanical drive or derivatives of aircraft engines.

Basic compressor & turbine sections divided into HP and LP units. HP and LP each operates at different speed – depends upon load & ambient conditions. The LP compressor (LPC) is coupled to and is driven by LP turbine (LPT). The HP compressor (HPC) is coupled to and is driven by the turbine (HPT).

In some three-shaft machines, an intermediate compressor (IPC) & turbine (IPT) also used, in between LP & HP sections (configuration not shown).

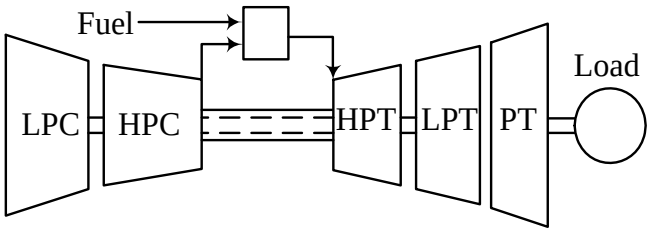

Fixed or variable-speed loads are driven off LP shaft.

Some units can drive off cold-end or hot-end of LP shaft.

In some cases, multi-shaft units act as a "gas generator", and a PT is required to drive the load.

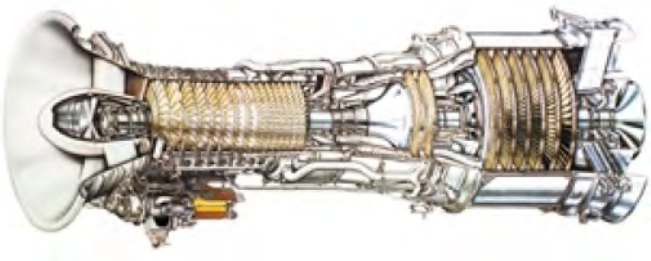

AERO-DERIVATIVE & HEAVY-DUTY INDUSTRIAL GAS TURBINES

"THERMODYNAMIC COUSINS" – sharing the same basic cycle.

Aero-Derivative GTs – based on aircraft engines; usually low weight / frontal area (generally inconsequential for industrial service)

The early-original **jet engines** had their nozzles removed & power turbines (PT's) installed for industrial service

Later-design **turbo-prop** & **turbo-fan** engines – industrialized by redesign of the prop or fan takeoff drives' or LP section; or by a PT.

Most aero-derivatives (compared to same-size industrial cousins):

- very efficient because of their high T3 and P2/P1 designs.
- less HRSG steam generation due to lower exhaust gas flows.

Major Maintenance – generally conducted by complete removal of gas turbine from package – special lifting frames required.

Modules disassembled into **smaller** components - LPC, HPC, combustion module, HPT and LPT, etc.

Minor maintenance activities – conducted **at** site.

Major maintenance & overhaul - unit **returned** to certified shop.

Lease engines available – replaces original engine while under repair.

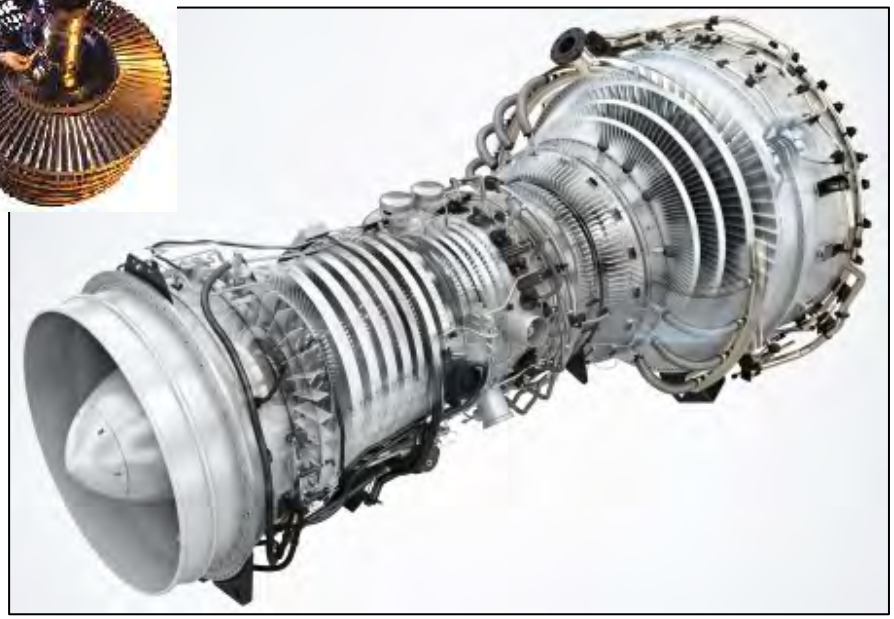

Heavy-Duty Industrial GTs – heavier and more-rugged than its cousin

Optimized to operate over narrow speed range & generally for base-load duty

Typically, the scheduled maintenance intervals are longer than aero units

Heavy multi-cylinder castings and fabrications.

Large bolted horizontal and vertical split joints.

Heavy built-up rotors & journal bearings.

Large solid couplings

Large baseplates and frames.

Major Maintenance – usually done at site**:**

- removal of top half cylinder
- removal of diaphragms and blade rings
- lifting and removal of the turbine rotor
- subsequent blade removal.

COMPARISON – Aero-Derivative & Heavy-Duty Industrial Gas Turbines

	Aero-Derivative	Heavy-Duty Industrial
Performance	Up to 50~65 MW. Up to 41~45% efficiency (LHV). Generally, less waste heat opportunity from the exhaust gases.	Up to 240 MW+. Up to 35~45% efficiency (LHV). Good waste heat opportunity. Large units with high exhaust temperatures allow reheat combined-cycle
Fuel Aspects	Natural gas to light distillates and jet fuels. Most require relatively high gas pressures.	Natural gas through to distillates and cheaper heavy or residual fuels. Generally require lower gas pressures. Expensive treatment of heavy / residual fuels is required.
Start-Up	Quick startup – 5~20 minutes. Relatively low horsepower starters usually electro-hydraulic	20 to 60 minutes depending on size. High horsepower diesel or motor starters, also some are started by the motoring of the generator itself
Loading	Quick loading, sometimes 10~25%/min	Slower loading, 1~10%/min depending on size
Shutdown	Many larger units require a short time of motoring to cool internals after a trip, but can then be shutdown	Many units require 1~2 days on turning gear after shutdown, but most can be motored to assist quicker cool down

Some GT units like the GE LMS100 combine aero-derivative and heavy-duty industrial aspects, utilizing sections from their LM and industrial lines.

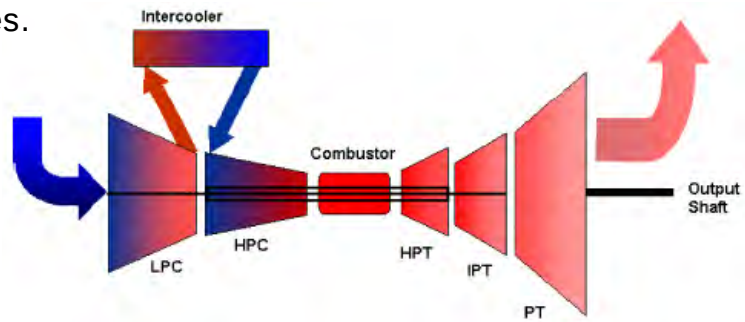

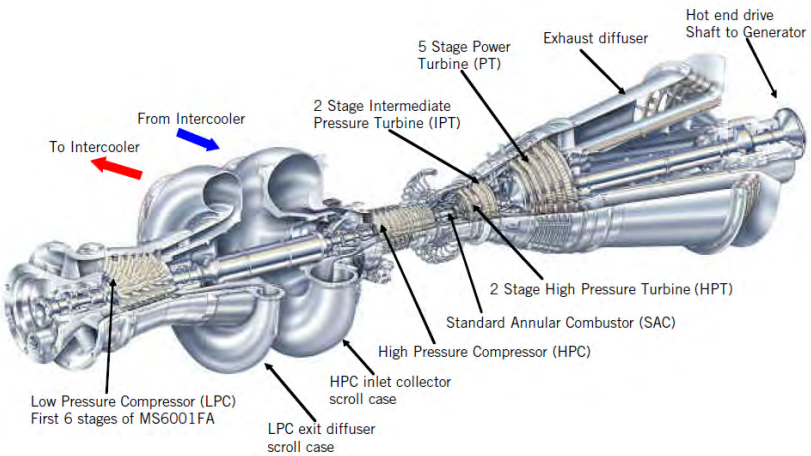

THE GAS TURBINE PACKAGE

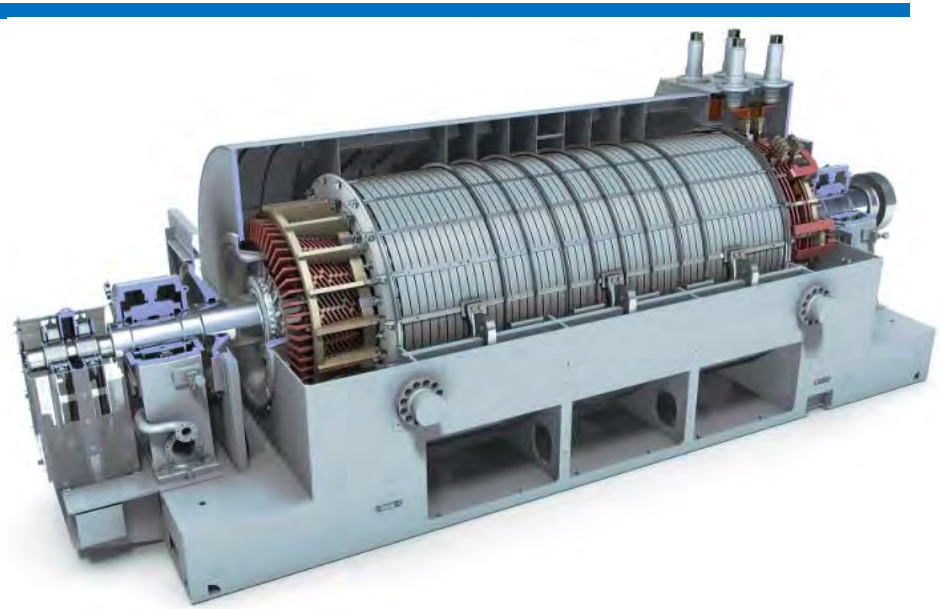

"Packaging" completes the machine - needs to be straightforward to install & commission; and easy to maintain.

Driven Equipment

Typically:

- synchronous generators – rated per ANSI C50.14.
- process or pipeline compressors
- occasional use as large pumping sets for oil.

For cogeneration / combined-cycle – typically a **Generator**.

2-pole (3600 rpm) or 4-pole (1800 rpm) for 60 Hz.
Air-cooled, water-cooled (TEWAC) or hydrogen-cooled (the largest units).

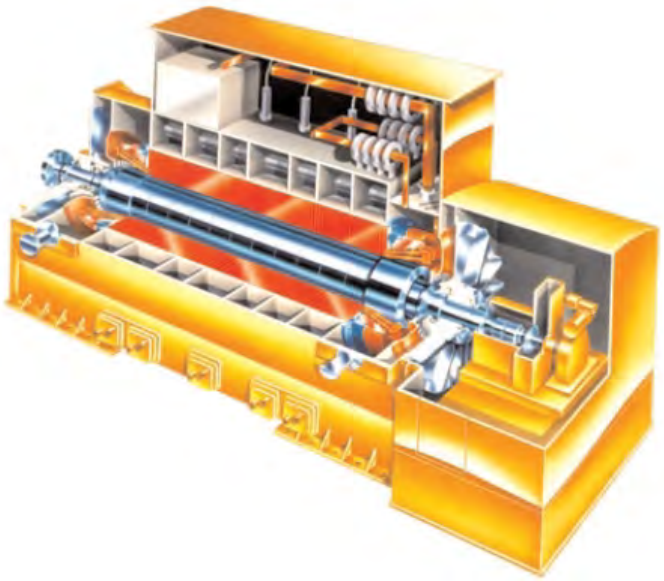

Generator output voltages:

- 600V for the very smallest GT's,
- to 2.4 and 4.16 kV for the 3~8 MW class units,
- 13.8 kV for the 10 MW+ units,
- 27.6 kV for the 100 MW+ units.

Excitation System required for voltage & power factor/var control – brushless or static.

Gearbox: when GT output speed doesn't match generator speed - double-helical or epicyclic gearboxes

Gas Turbine Air Inlet Systems
Filtration, Silencing, Air Heating and/or Cooling

Critical to GT health, for noise mitigation and/or performance.

Filtration: high-volume multi-stage high-efficiency filtration systems – capture atmospheric particles and prevent their deposition on the bladepath

Inlet Air Heating: via coils or bleed air systems - for anti-icing; inlet temperature / performance optimization; DLE control

Inlet Air Cooling; via coils – for inlet temperature / performance optimization at higher ambient temperatures

Evaporative Cooling Systems & mist eliminators

Fogging systems & mist eliminators

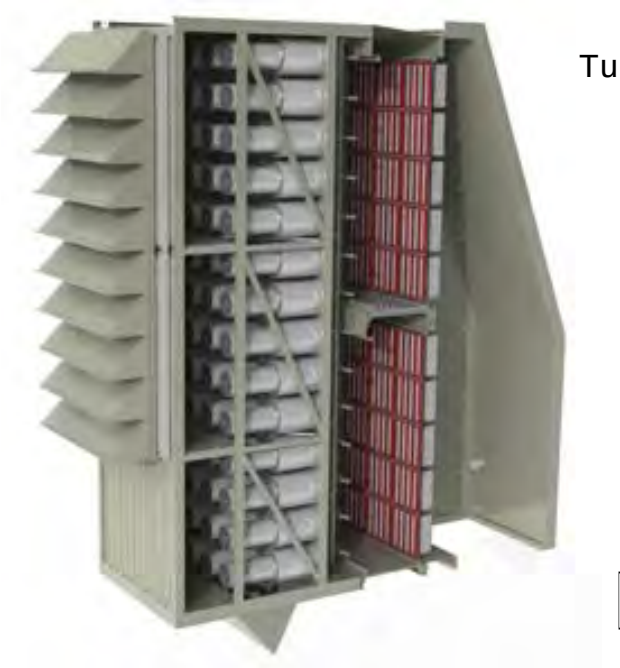

Tuned **inlet air silencers** – absorb sound & acoustic emissions from intake

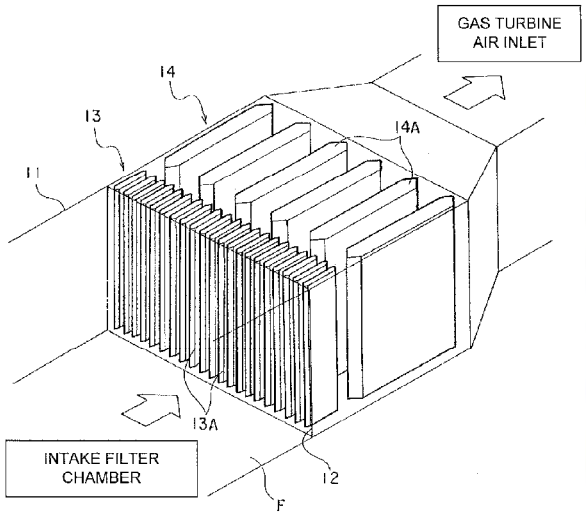

Lubricating Oil Systems

Main, auxiliary and emergency lubricating and control oil (as required) systems – provided for gas turbine and driven equipment.

Aero-derivatives – usually fire-resistant synthetic lube oils.

Power turbines, gearboxes & generators – mineral-based lube oils.

Most heavy-duty industrial GT's have common lube oil system – turbine, gearbox & generator.

Lube oil – is cooled by aerial fin-fan coolers, or oil-to-water heat exchangers.

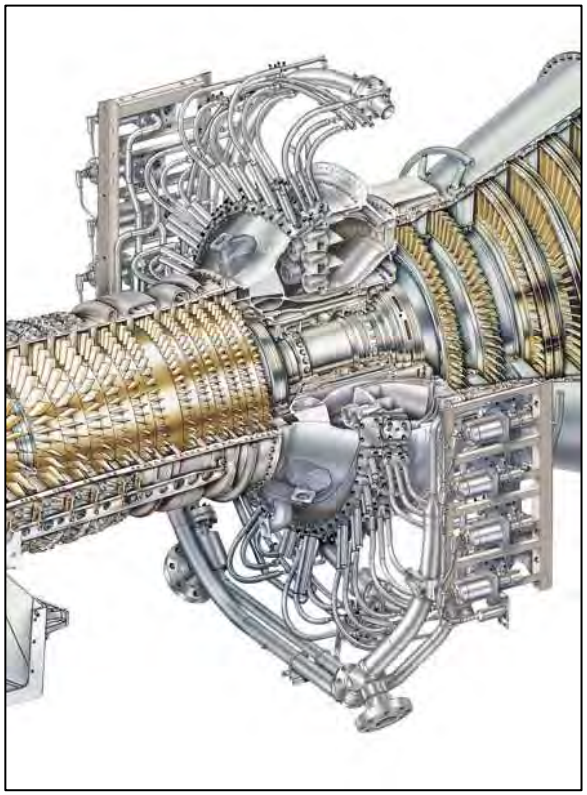

Fuel Systems

Aero-derivative & heavy duty gas turbines – use light-liquid or gaseous fuels

Only the frame units – operate on heavy fuel oils & crude oils.

Fuel control systems for gaseous and liquid fuels include:

- filters, strainers and separators;
- block & bleed valves;
- flow control/throttle and sequencing valves, manifolds and hoses.

For natural gas duty – sometimes reciprocating or centrifugal gas compression equipment required, plus pulsation dampening equipment.

Complex dry low-NOx (DLE) units – some units require several throttle valves, staged and sequenced to fire:

- pilot / ignition,
- primary,
- secondary and/or tertiary nozzle and basket sections (as applicable) of the DLE combustion system;

All as required for startup/shutdown, speed ramps, and load changes. Several fuel manifolds usually required.

Acoustic and Weatherproof Enclosures

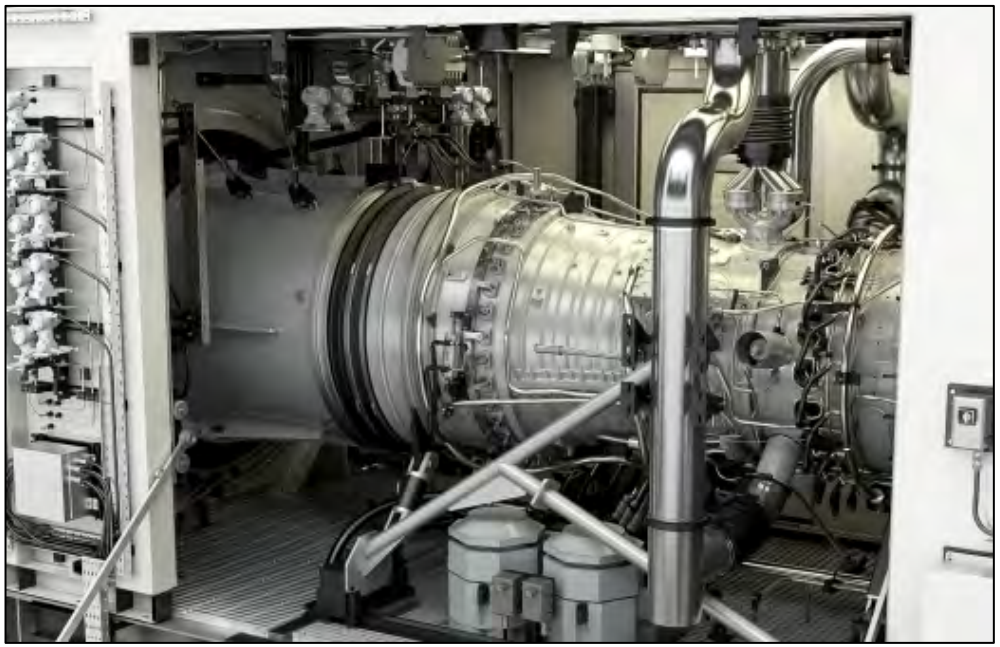

Most smaller industrial & almost all aero-derivative GTG packages are pre-packaged - complete drivetrain enclosed in acoustic enclosure(s); quicker & easier to install. The turbine & generator compartments are separately ventilated.

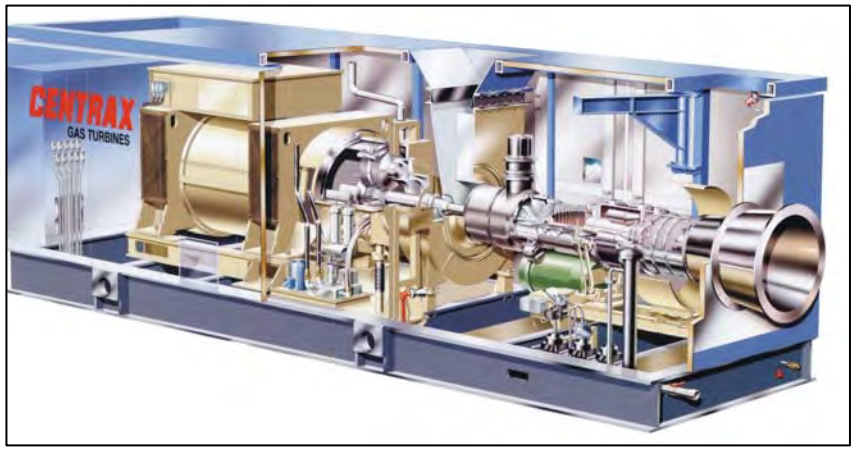

40~60 MW+ industrial / heavy-duty GT machines are generally too large to pre-package.

Components shipped in major blocks & assembled at site.

Enclosures or buildings (if required) are built around the complete drivetrain.

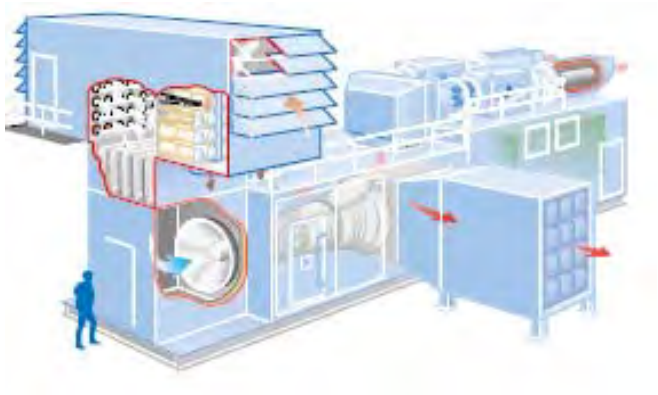

Controls and Monitoring

Complex combinations of digital PLC and/or processor systems: Woodward; vendor-proprietary systems; occasionally DCS-based

Systems include, manage, sequence, monitor and control:

- GT fuel control and speed/load control
- generator's voltage, power factor / var control
- breaker synchronization, relay protection
- auxiliaries
- vibration, temperature & pressure monitors
- sequence of events recorders
- certified metering systems
- communication to plant DCS.

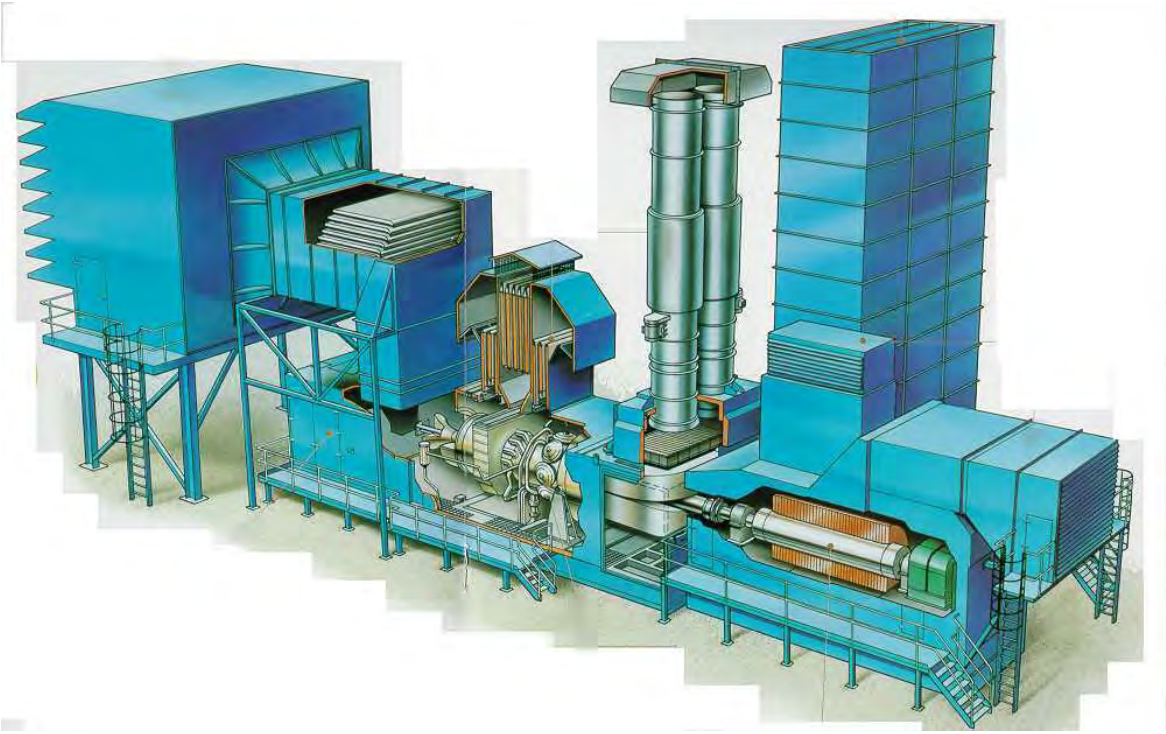

Miscellaneous Auxiliaries

- starting, purge and turning gear systems
- inlet manifolds
- exhaust diffusers or plenums
- water wash systems
- water and steam injection (if required
- gas detection systems
- fire detection and CO2 suppression systems
- battery and charger systems
- ventilation and heating
- exhaust expansion joint
- silencer & stack systems (simple-cycle)
- HRSGs for steam production (cogeneration or combined-cycle)

GAS TURBINE PRICING - from the *2018 Gas Turbine Handbook*© ($USD)

Simple-Cycle GTG Prices – not total "project cost"

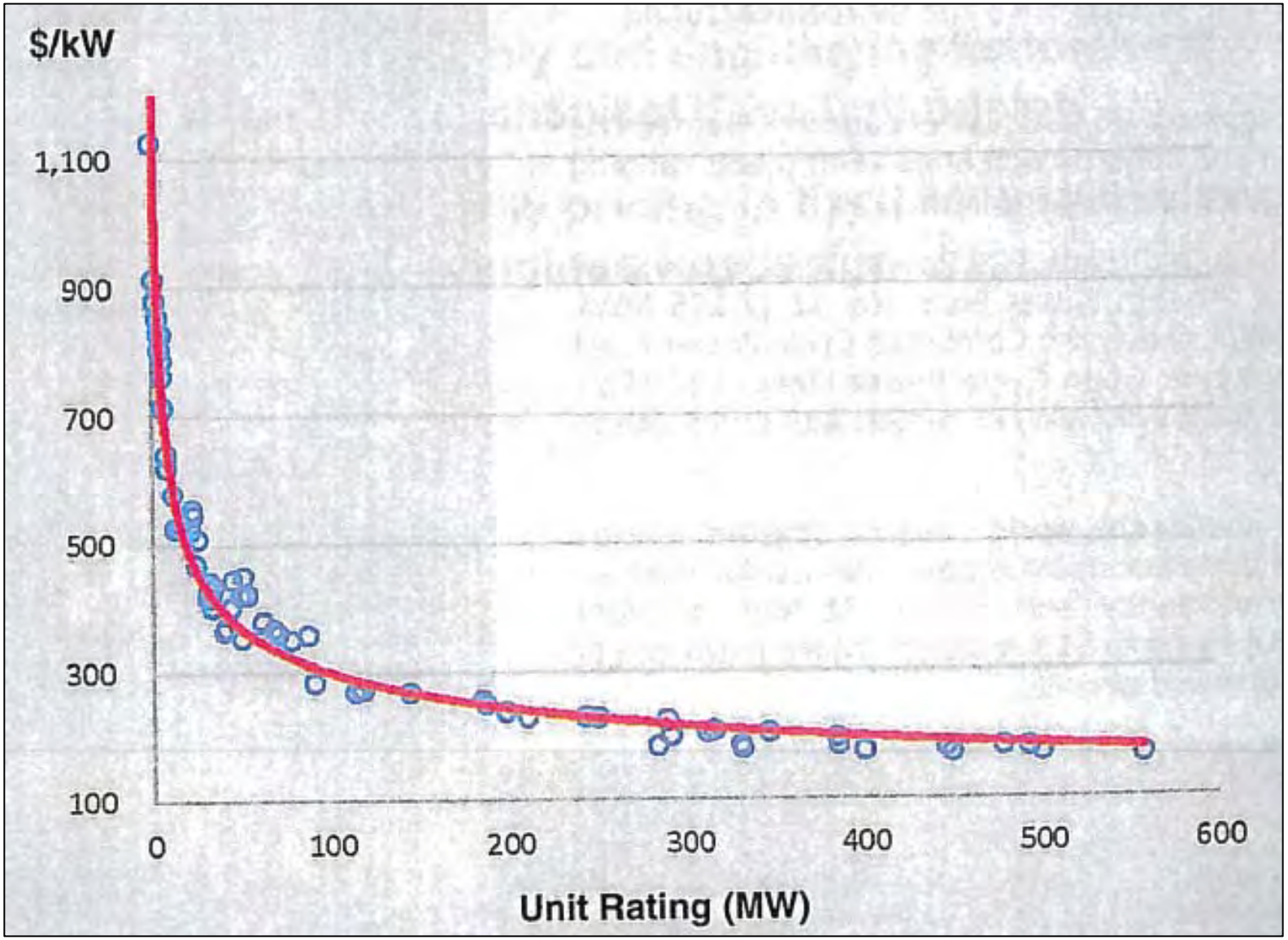

2018 Simple Cycle Genset Prices

Scope of supply and engineering factors that enter into simple cycle genset equipment pricing

How much does a packaged simple cycle gas turbine plant cost? All depends on unit size, design technology and scope of equipment supply.

GTW's database covers a wide range of unit size and technology which shows that price ($) and unit price ($ per kW) depend strongly on unit size and type of gas turbine (aero vs frame).

GTW's simple cycle plant prices are based on standard bare bones single-fuel (gas only) packaged units. A myriad of add-on options and customized design features are provided by OEMs at additional cost.

The prices are quoted in US dollars, FOB factory, for single-unit purchases. They are for equipment only, and do not cover transportation, plant engineering, construction, project-specific options or owner's project costs.

Price update. Except for some individual cases where new information from the marketplace has indicated otherwise, this year's estimated gas turbine prices reflect a slight upward trend (~3%) compared to last year's data.

Despite a softening market for large utility units in North America, this follows the observed movement of the cost indexes for industrial and power generation equipment (see https://www.ihs.com/info/cera/ihsindexes/).

2018 Simple Cycle Gensets

Pricing data for simple cycle gensets.
"Best Fit" curve plotted as: $/kW = 9650 x (kW)^-0.3

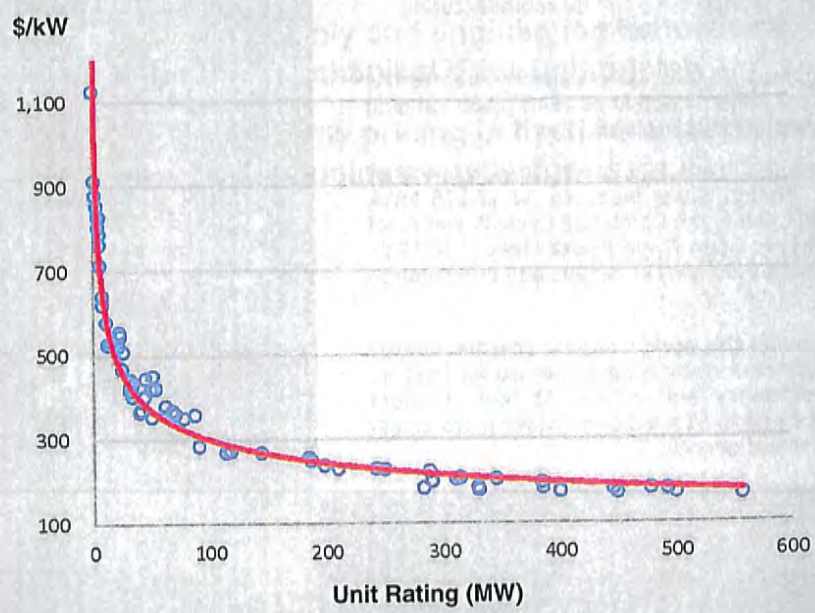

However, considering the significant over-capacity of manufacturing space for larger gas turbine units, the trend in pricing may very well turn downward.

A relatively flat US dollar relative to major international currencies during the current period has also meant little influence of currency exchange rates on price levels (in US$) for equipment manufactured in Europe and Asia.

Equipment scope. Limited to minimum scope of supply for a simple cycle power generating plant package built around a gas turbine, generator, associated mechanical and electrical auxiliary systems, including controls. Scope includes:

- Gas turbine. Skid-mounted gas turbine engine, starting motor, reduction gearbox (if any), lube oil and hydraulic fluid systems, compressor water wash, fuel forwarding and control, external turbine cooling (if any), interconnecting piping.
- Generator. Standard air-cooled generator package; hydrogen or enclosed water-air cooling (TEWAC) usually offered as options for larger units. Generator exciter is typically included in the standard package.
- Balance of plant. Standard auxiliaries such as air intake filter, inlet ducting and silencer, exhaust ducting and stack (short) with silencer, vibration monitoring, digital control system.

Packaged gensets typically include standard acoustic enclosures with ventilation and fire protection systems.

Mechanical and electrical auxiliaries for gas turbine operation are often

pre-packaged and supplied as separate enclosed auxiliary skids. Electrical auxiliaries include batteries, motor control center, voltage regulator and surge protection.

Auxiliary transformers needed to condition power supply for plant motors (starting, lube oil pump and cooling fans) are usually optional, as is main power step-up transformer.

Other OEM options include liquid or dual-fuel (gas and liquid) combustion, inlet air chilling (or deicing), isolated phase bus, fuel gas compression, etc.

Price and performance. Gas turbine model power output and efficiency ratings in GTW's simple cycle pricing tables are OEM specified design ratings for base load operation at ISO standard (59°F ambient and sea level) conditions on natural gas fuel.

Estimated unit price ($ per kW), based on base load ratings, makes it possible to review and evaluate differences in unit pricing of equipment cost of similarly sized units.

A best-fit relationship between $-per-kW and kW rating for listed models is provided and plotted to assist in calculating the cost of comparably sized models not listed.

Besides unit size, other factors that enter GT package price are gas turbine type (i.e., frame vs. aero) and engineering design factors such as firing temperature, pressure ratio, and mass flow.

Actual real-world OEM bid prices are quoted for customer-specified scope and with guarantees on net power and heat rate (efficiency) at site-specific conditions (i.e. ambient temperature, elevation and relative humidity) and specified fuel composition.

Bid quotes. OEMs strategically hedge project bidding with some performance margin, i.e. slightly lower power output and higher heat rate, to allow for normal variations in manufacturing tolerances and test uncertainties.

Quotes are always bid on the basis of "factory new and clean" performance without allowance for degradation in performance with usage. Contract language usually specifies a limit in operating time before performance testing must be conducted.

Typically, there is a margin of 0.5 to 1% on power and heat rate ratings. This explains why slightly better performance than expected may initially be realized.

Other factors that usually enter a project price quote include number of units ordered (i.e., quantity discounts), scope of equipment supply, site-specific requirements, duty cycle, geographic location and OEM's local market share position.

Variation in currency valuations can also play a significant role depending on which countries (i.e., currencies) are involved in the gas turbine's manufacture, purchase, and installation.

Gas turbine gensets designed for onshore oil and gas pipeline operation typically are priced around 10% higher than industrial or utility power plants. That is due to the cost of compliance with special packaging and safety requirements such as found in API specifications.

Offshore platform gas turbine packages command an additional price premium to cover costs such as specialized mountings and housing, marine-resistant coatings or ultra-efficient intake filter systems designed to handle salt-water laden air.

Benchmark. This reference section of the GTW Handbook serves as a benchmarking tool for assessing the equipment cost of different size and type plants.

To allow for uncertainties, the estimated budget prices should be treated as having a plus or minus 10% range of accuracy.

The data plot and best-fit curve show the strong relationship of cost to unit size, especially with smaller units where the effect of size is most pronounced. 2MW plant may be priced at around $800 per kW compared to $500 per kW for a 10MW plant.

From around 20MW to 100MW cost per kW falls less steeply, from around $500/kW to $300/kW. This is displays the economies of scale which allow OEMs to reduce manufacturing costs (per kW) as unit physical size and power ratings increase.

Beyond 100MW, the $ per kW trend flattens, but still continues to decrease down to around $200/kW, or lower, for the largest G, H and J class units. Substantially lower $/kW prices (10%-20%) may be observed for these units, compared to earlier F-class technology.

This is despite the higher cost of more exotic materials, coatings and cooling techniques needed for machines operating in the 2700°F to 2900°F firing temperatures range, and is the apparent result of the significant gains in power output achieved with these large 400-500MW-class units.

Data spread. Note that the spread in the data of comparably rated units is due partly to effect of 50Hz vs. 60Hz direct drive machines, where the latter are more compact (increased power density) due to higher engine operating speed, and to differences in design technology (aero vs frame machines).

Aeroderivative units cost considerably more than heavy duty units. Also, note that the data plot excludes the LMS100 series since their inclusion of an intercooler puts them in their own price class (see table) where a premium is paid for even higher efficiency than the typical aeroderivative genset.

Regardless of gas turbine design and rating, however, remember that the cost of engineering, construction services and other project costs can add from 60% to 100%, and more, to the cost of the equipment alone.

For rough estimates, a useful rule of thumb is to double the equipment price for estimating total installed costs. ■

2018 Simple Cycle Genset Prices

Equipment-only budget pricing, in fixed 2018 US dollars, for standard bare bones design

OEM Model	Freq Hz	Base Load Rating	Heat Rate Btu/kWh	Efficiency	Budget Price	$/kW
C200	50/60	200 kW	10,300 Btu	33.1 %	$225,000	$1,125
M1A-17D	50/60	1,700 kW	12,701 Btu	26.9 %	$1,550,000	$912
OP16-3C	50/60	1,876 kW	13,585 Btu	24.7 %	$1,650,000	$880
Centaur 40	50/60	3,515 kW	12,240 Btu	27.9 %	$3,000,000	$853
501-KB5S	50/60	3,980 kW	11,504 Btu	29.7 %	$3,300,000	$829
Centaur 50	50/60	4,600 kW	11,630 Btu	29.3 %	$3,700,000	$804
501-KB7S	50/60	5,380 kW	10,570 Btu	32.3 %	$4,450,000	$827
SGT-100	50/60	5,400 kW	11,007 Btu	31.0 %	$4,250,000	$787
Taurus 60	50/60	5,670 kW	10,830 Btu	31.5 %	$4,320,000	$762
Taurus 65	50/60	6,300 kW	10,375 Btu	32.9 %	$4,500,000	$714
SGT-300	50/60	7,901 kW	11,158 Btu	30.6 %	$4,900,000	$620
Taurus 70	50/60	7,965 kW	9,955 Btu	34.3 %	$5,100,000	$640
Mars 100	50/60	11,350 kW	10,365 Btu	32.9 %	$6,550,000	$577
GTU-12PG-2	50/60	12,300 kW	10,469 Btu	32.6 %	$6,460,000	$525
SGT-400	50/60	14,326 kW	9,647 Btu	35.4 %	$7,500,000	$524
Titan 130	50/60	16,450 kW	9,605 Btu	35.5 %	$8,750,000	$532
Titan 250	50/60	21,745 kW	8,775 Btu	38.9 %	$11,350,000	$522
LM2500DLE 50Hz	50	22,400 kW	9,626 Btu	35.4 %	$12,400,000	$554
LM2500DLE 60Hz	60	23,200 kW	9,317 Btu	36.6 %	$12,650,000	$545
SGT-600	50/60	24,480 kW	10,161 Btu	33.6 %	$11,450,000	$468
1x FT8 SP25 DLN	60	25,371 kW	8,993 Btu	38.1 %	$12,900,000	$508
1 x FT8 SP30	60	30,892 kW	9,327 Btu	36.6 %	$12,875,000	$417
LM2500+ DLE 60Hz	60	31,900 kW	8,785 Btu	38.8 %	$13,650,000	$428
RB211-GT61 DLE	50/60	32,130 kW	8,681 Btu	39.3 %	$14,170,000	$441
SGT-700	50/60	32,820 kW	9,170 Btu	37.2 %	$13,650,000	$416
MS5002E	50/60	33,310 kW	9,517 Btu	35.9 %	$13,400,000	$402
LM2500+ G4 DLE	60	34,500 kW	8,709 Btu	39.2 %	$14,950,000	$433
SGT-750	50/60	39,810 kW	8,456 Btu	40.4 %	$14,525,000	$365
H-25	50/60	41,030 kW	9,432 Btu	36.2 %	$15,100,000	$368
6B.03	50/60	44,000 kW	10,180 Btu	33.5 %	$17,650,000	$401
LM6000 DLE	60	45,000 kW	8,097 Btu	42.1 %	$20,000,000	$444
LM6000 DLE Sprint	60	50,000 kW	8,097 Btu	42.1 %	$21,000,000	$420
SGT-800	50/60	50,500 kW	8,899 Btu	38.3 %	$17,800,000	$352

OEM Model	Freq Hz	Base Load Rating	Heat Rate Btu/kWh	Efficiency	Budget Price	$/kW
2xFT8 SP50 DLN	60	51,058 kW	8,938 Btu	38.2 %	$23,000,000	$450
LM6000 SAC	60	53,000 kW	8,175 Btu	41.7 %	$22,250,000	$420
SGT-A65 TR DLE	60	54,020 kW	8,023 Btu	42.5 %	$22,750,000	$421
2xFT8 SP60	60	62,086 kW	9,281 Btu	36.8 %	$22,100,000	$356
SGT-A65 DLE ISI	60	61,842 kW	7,867 Btu	43.4 %	$23,450,000	$379
LM9000	50/60	68,000 kW	8,107 Btu	42.1 %	$25,000,000	$368
1xFT4000 SP60	60	70,836 kW	8,269 Btu	41.3 %	$25,500,000	$360
AE64.3A	50/60	78,000 kW	9,400 Btu	36.3 %	$27,500,000	$353
6F.03	50/60	87,000 kW	9,340 Btu	36.5 %	$31,100,000	$357
7E.03	60	91,000 kW	10,060 Btu	33.9 %	$25,750,000	$283
M501DA	60	113,950 kW	9,780 Btu	34.9 %	$30,500,000	$268
SGT6-2000E	60	117,000 kW	9,705 Btu	35.2 %	$31,900,000	$273
LMS100 Wet	60	118,000 kW	7,628 Btu	44.7 %	$40,000,000	$339
H-100	50	118,080 kW	8,919 Btu	38.3 %	$32,000,000	$271
M701DA	50	144,090 kW	9,810 Btu	34.8 %	$38,600,000	$268
AE94.2	50	185,000 kW	9,426 Btu	36.2 %	$47,400,000	$256
M501F	60	185,400 kW	9,230 Btu	37.0 %	$47,000,000	$254
SGT5-2000E	50	187,000 kW	9,426 Btu	36.2 %	$46,500,000	$249
7F.04	60	198,000 kW	8,840 Btu	38.6 %	$47,000,000	$237
GT13E2	50	210,000 kW	8,980 Btu	38.0 %	$48,000,000	$229
7F.05	60	243,000 kW	8,570 Btu	39.8 %	$55,500,000	$228
SGT6-5000F	60	250,000 kW	8,682 Btu	39.3 %	$56,750,000	$227
9F.04	50	288,000 kW	8,810 Btu	38.7 %	$64,000,000	$222
M501GAC	60	283,000 kW	8,531 Btu	40.0 %	$51,250,000	$181
7HA.01	60	290,000 kW	8,120 Btu	42.0 %	$57,500,000	$198
SGT6-8000H	60	310,000 kW	8,530 Btu	40.0 %	$63,000,000	$203
9F.05	50	314,000 kW	8,930 Btu	38.2 %	$65,000,000	$207
SGT5-4000F	50	329,000 kW	8,322 Btu	41.0 %	$60,000,000	$182
M501J	60	330,000 kW	8,105 Btu	42.1 %	$58,500,000	$177
GT26	50	345,000 kW	8,322 Btu	41.0 %	$70,000,000	$203
7HA.02	60	384,000 kW	8,030 Btu	42.5 %	$75,000,000	$195
M701F	50	385,000 kW	8,144 Btu	41.9 %	$70,000,000	$182
M501JAC	60	400,000 kW	7,755 Btu	44.0 %	$69,250,000	$173
SGT5-8000H	50	450,000 kW	<8,322 Btu	>41 %	$76,500,000	$170
9HA.01	50	446,000 kW	7,910 Btu	43.1 %	$80,000,000	$179
M701J	50	478,000 kW	8,067 Btu	42.3 %	$86,000,000	$180
M701JAC	50	493,000 kW	7,954 Btu	42.9 %	$88,000,000	$178
GT36	50	500,000 kW	8,222 Btu	41.5 %	$85,000,000	$170
9HA.02	50	557,000 kW	7,760 Btu	44.0 %	$92,000,000	$165

GAS TURBINE PRICING - from the *2018 Gas Turbine Handbook*© ($USD)

Combined-Cycle (CCGT) Prices – approximately the project cost for a "reference plant" without typical options and site specific factors.

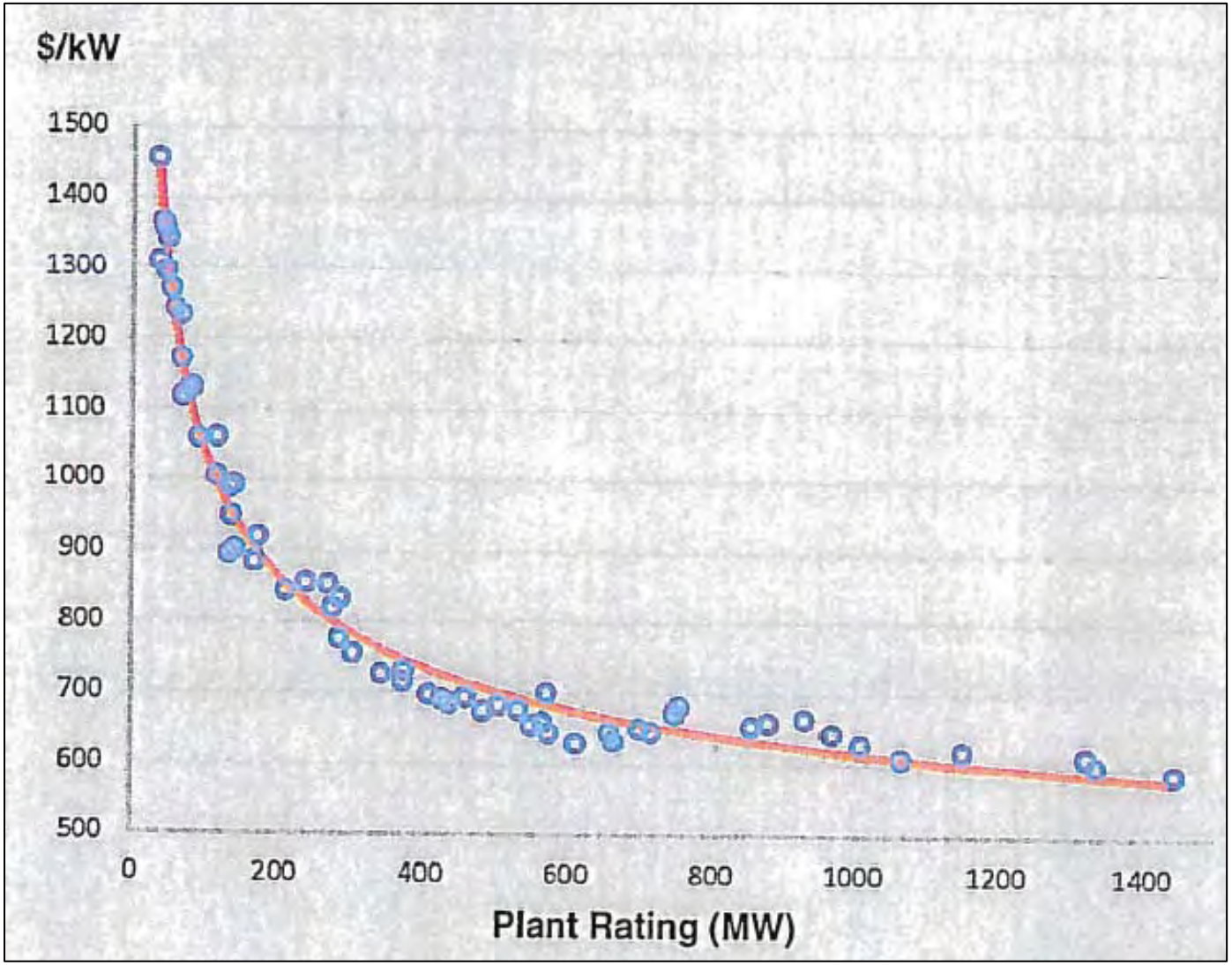

2018 Combined Cycle Plant Prices

Scope of supply, engineering and construction factors that enter into combined cycle plant equipment pricing

How much does a combined cycle plant cost? Broadly speaking, it all depends on plant size and scope, and on engineering tradeoffs for the design and performance optimization for specific application and site location.

GTW's combined cycle plant prices are based on standard bare-bones plants designed for single-fuel operation (gas-only) with conservative steam cycle design and without HRSG duct firing or other performance enhancing options.

The prices are quoted in US dollars FOB factory for EPC turnkey scope, including major equipment supply, plant engineering and construction. They do not cover transportation, project-specific options, owner's project costs or project contingencies.

Except for some individual cases, where new information from the marketplace has indicated otherwise, this year's projected combined cycle plant prices reflect a slight upward trend (~ 3%) compared to last year.

This is based on a general uptick noted in the widely recognized HIS/CERA Power Projects Cost Index (see www.ihs.com/info/cera/ihsindexes/).

However, with the forecasted slowing of growth of gas-fired power generation, particularly in North America, and the over-capacity in large gas turbine manufacturing space, the pricing trend for larger combined cycle plants may very well turn downward in the near term.

With GTW prices quoted in US dollars, some year-to-year variation may also be attributed to fluctuation in the international value of the dollar in different markets. After a general strengthening of the dollar in 2015-2017, the value of the dollar has been relatively flat during the current period.

Equipment scope. Limited to minimum scope of supply for plants designed around one or more gas turbine gensets, one or more matching HRSGs (without SCR or CO catalyst for emissions reduction), single steam turbine genset with water-cooled condenser and mechanical draft cooling tower, integrated plant controls. Major equipment includes:

- Gas turbine. Skid mounted single-fuel unit with acoustic enclosure for outdoor installation, with standard starting and control systems. Includes standard mechanical and electrical auxiliaries normally supplied with simple cycle gas turbine package (no inlet air chilling or de-icing).
- Steam turbine. Condensing subcritical design, with single or dual-pressure levels for small plants, triple-pressure levels with reheat for large plants. Axial or radial exhaust, steam bypass and controls, enclosure, and water-cooled condenser. Includes all valves and controls (typically hydraulic).
- Unfired HRSG. Heat recovery steam generator for outdoor installation, along with ductwork and short exhaust stack with silencing. Dual or triple-pressure reheat units as dictated by gas turbine and steam turbine size and technology.
- Generator. Air-cooled generators for small gas turbines; hydrogen cooled for larger units. Large air-cooled generators for combined cycle application typically use enclosed water-to-air cooling (TEWAC) design. Neutral grounding cubicle and bus to main breaker included with generator packages.
- Control system. Distributed control system (DCS) for integrating gas turbine, HRSG and steam turbine controls with overall combined cycle plant control and operation.

Balance of plant. Standard balance-of-plant equipment for combined cycle plant construction and operation covers:

- Mechanical auxiliaries. Critical water handling systems with pumps and piping for boiler feed water, condenser cooling water and condensate.
- Electrical auxiliaries. Auxiliary power transformers and switchgear, voltage regulators, bus and breakers needed for plant operation. Main step-up transformers (one for each generator) for connecting plant output to the utility substation are excluded. Includes minimal control room installation.
- Engineering and construction. Allowance is made in EPC costs for plant design and engineering, foundations and installation of all equipment assuming non-union labor.

Excluded options. Popular customer-specified options considered outside combined cycle budget prices for a bare-bones combined cycle plant:

- Bypass stack. Allows independent operation of the gas turbine in simple cycle mode for quick start and flexible dispatch; option includes a mechanical damper in exhaust ducting to redirect flow.
- Inlet cooling. Evaporative and mechanical chilling systems that can boost plant output by up to 10% at 90°F hot day and 30% relative humidity operation.
- Duct firing. Supplementary duct firing to increase steam turbine output; also requires upgrades in steam and water handling systems.
- Catalysts. CO and SCR catalytic section for HRSG (to limit emissions) plus associated ammonia storage and feed systems.
- Back-up fuel. Storage and delivery of liquid fuel for back-up to natural

gas supply. Usually includes fuel unloading station and alternative provisions for NOx control, such as water injection.

Boundary limits. The defined scope of supply narrowly sets boundary limits such that they do not include utility grid interconnections, transmission lines, natural gas fuel pipelines, or service/access roads external to the plant site.

Within the plant site, such project specific balance-of-plant equipment such as fuel gas booster compressors, water treatment systems, waste water systems and cooling towers are also excluded.

Price estimates reflect overnight costs and exclude time-dependent costs such as escalation and interest during construction and highly variable project-specific owner expenses such as land, plant site preparation, project development, financing, permits, insurance, taxes, etc.

Nor do they cover the "first fill" of operating consumables such as lube oil, chemicals, catalysts, special tooling and replacement parts and spares, which, although not a significant percentage of total costs, is worth noting by cost estimators.

Pricing scope. GTW's budget cost estimates for combined cycles are based on OEM reference plant designs and EPC contractor costs. They include cost of equipment and construction, but exclude customized EPC services, project-specific options and owner's project costs.

In the real world, total plant costs for combined cycle plants powered by identical gas turbines can vary by as much as 25% depending on differences in engineering, design choices and add-on plant options and facilities.

Marketplace plant price quotes are invariably higher than GTW estimated budget prices. Result of extended scope of supply and project-specific costs related to site location and greater project complexity.

Given the uncertainty on scope of supply, even for a bare bones plant, we attach a plus or minus accuracy of 15% to the estimated price of combined cycle plants.

2018 Combined Cycle Plants
Pricing data for combined cycle plants.
"Best Fit" curve plotted as $/kW = 370 + (10.3 x 10^4) x (kW)^-0.438

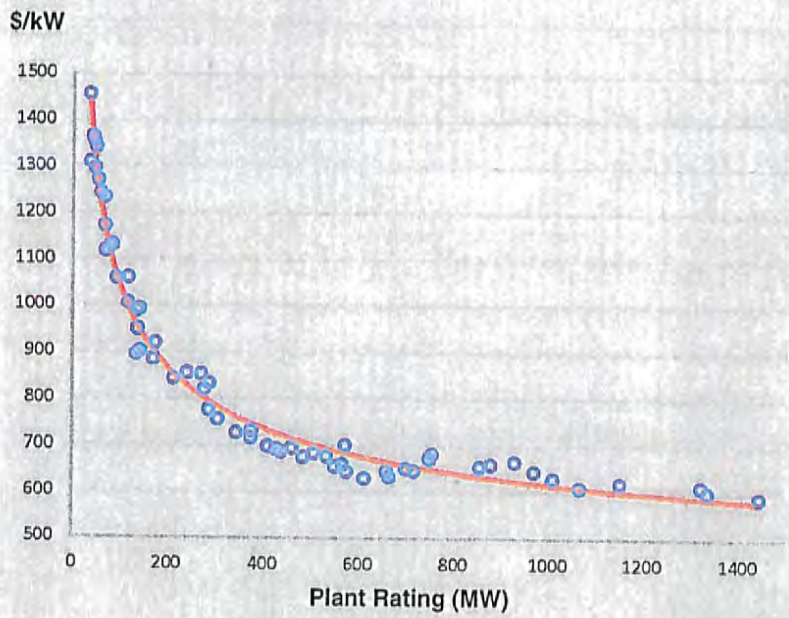

On the accompanying tables, combined cycle plant power and efficiency values are based on OEM ratings for optimized reference plant designs at ISO standard (59°F ambient and sea level) site conditions.

Size matters. As one might expect, prices for combined cycle power plants strongly exhibit the cost advantages of economies of scale.

The plot of combined cycle plant price versus power output shows how $-per-kW prices sharply decrease with increasing plant size, although they level off at the upper end of the size spectrum. (Note: the $/kW values are based on the net plant power ratings as listed in the performance specs section. As described there, some variation in these ratings exists depending on whether the OEM has accounted for plant auxiliary loads in the data.)

Compared to simple cycle plants, the leveling off in the price vs. size curve is delayed somewhat with combined cycle plants due to the large percentage of total plant cost attributed to the steam bottoming cycle and balance-of-plant equipment.

There is also an associated rise in the cost of more advanced steam turbine cycle equipment to match advanced technology gas turbine designs for new generation combined cycle plants in the 500MW-plus size that operate at better than 60% net plant efficiencies.

On the gas turbine side, new materials and manufacturing processes (such as single crystal and directionally solidified castings) and thermal barrier coatings for nozzles and blades to withstand higher firing temperature, add substantially to costs. However, this is countered to a large extent, and even overcome, by the large gains in power output with the latest technology advances.

The global growth in wind power and solar generation has also spurred the introduction of costly upgrades and more flexible gas and steam turbine designs for combined cycles capable of fast startup and ramping, operational flexibility and high part-load efficiencies and emissions control. ■

GAS TURBINE PRICING - from the *2018 Gas Turbine Handbook*© ($USD)

Mechanical Drive Gas Turbine Prices – gas turbine only and does not include driven equipment nor, the total "project cost".

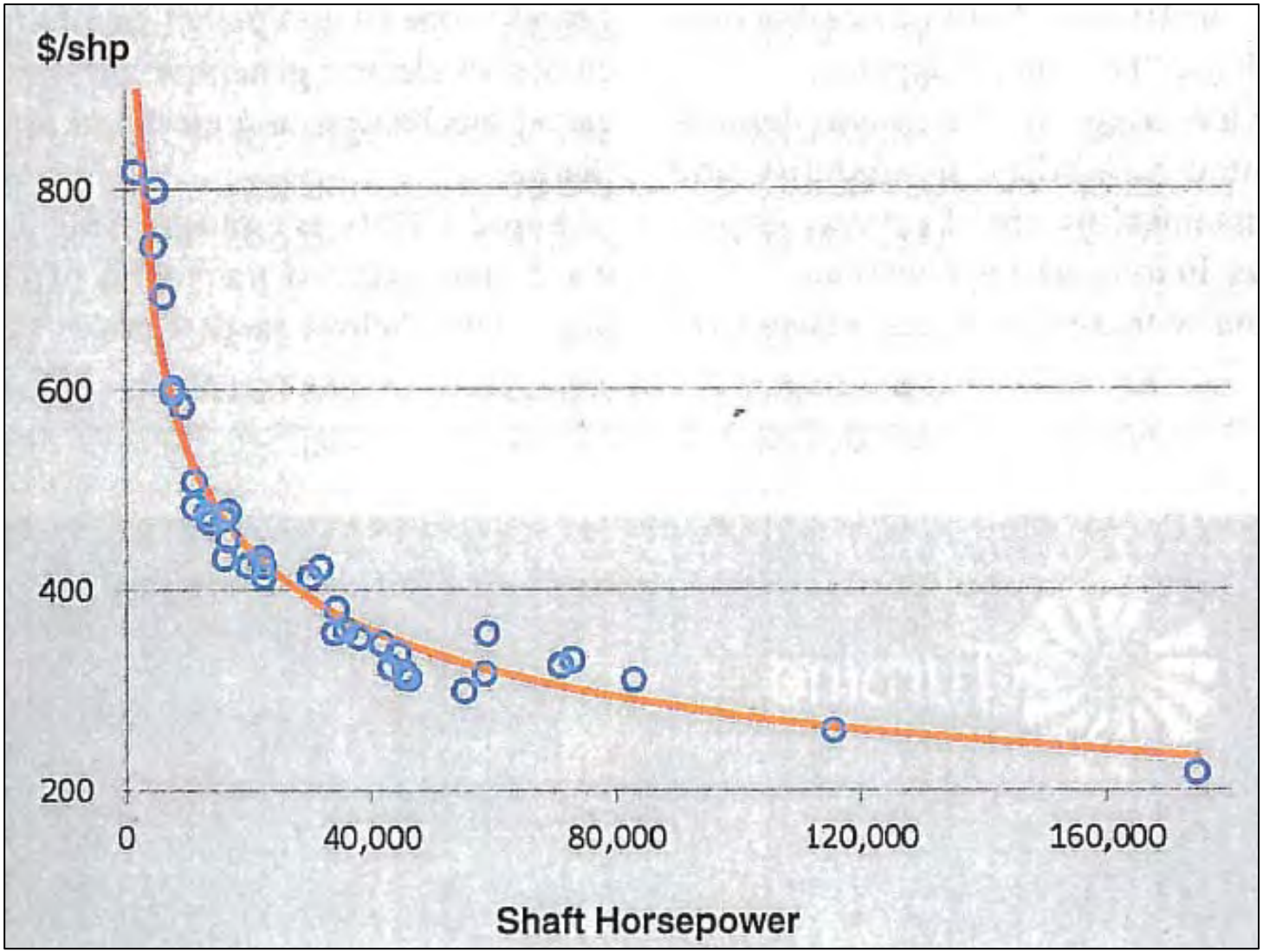

2018 Mechanical Drive Prices

Scope of supply and engineering factors that enter into skid-mounted mechanical drive equipment pricing

GTW's mechanical drive prices are based on the typical supply scope of packaged gas-only (not dual fuel) gas turbine prime movers designed to meet the widely varying demands of industrial applications.

Primary application is for compressor drives employed in the oil and gas and petrochemical industries, which are characterized by a lack of the standardization found in the power industry. This is generally reflected in their relatively higher unit prices.

Although a growing number of OEMs now offer complete packages that include the compressor, GTW pricing estimates are for the gas turbine package only (through the driveshaft flange).

Prices are quoted in US dollars FOB factory for a single or two-unit buy as opposed to a multi-station order. They represent equipment-only prices that do not include transportation, site engineering, installation or add-on options.

Compared to last year's price levels, which reflected the general downturn in oil and gas industry business since 2014, prices for 2018 show a slight upward (~3%) trend.

This is based on the current movement of recognized cost indexes for industrial equipment (ref: https://www.ihs.com/info/cera/ihsindexes/0)

Chart shows trend of unit price ($/shp) with output rating demonstrating typical economies of scale with steep drop-off in price starting around 40,000 shp.

2018 Mechanical Drives
Pricing data for mechanical drive prime movers.
"Best Fit" plotted as: $/shp = 8118 x (shp^-0.294)

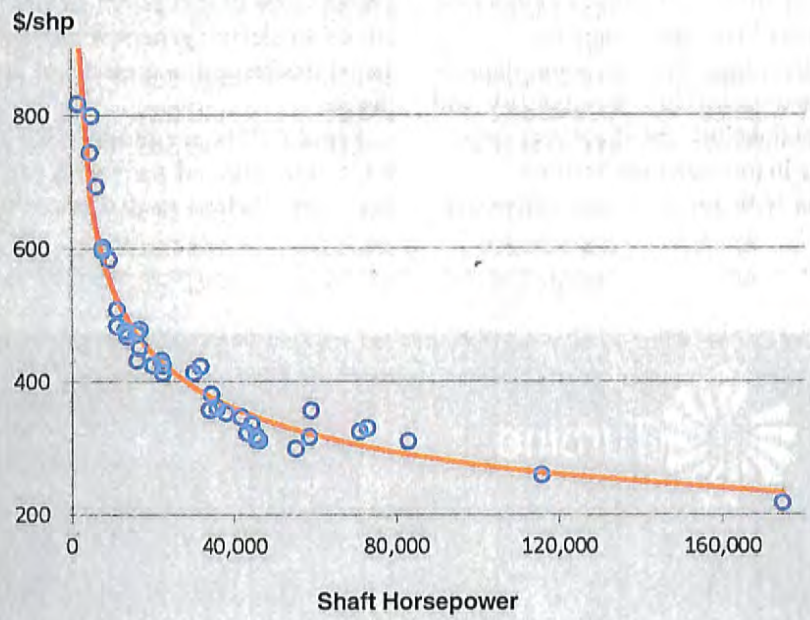

Equipment scope. Standard scope of supply includes gas turbine, reduction gearbox (when needed), inlet air filter, auxiliaries, and dry low NOx combustion, when available:

- Packaged unit. Skid-mounted single-fuel gas turbine with driveshaft output coupling, starting motor (electric or hydraulic) and lube oil systems.
- Output gearbox. Parallel-shaft gearbox is usually standard for aero units. Epicyclic gearbox is more compact and efficient, but adds to the price. (Most heavy-frame gas turbines are direct drive.)
- Inlet and exhaust. Air inlet filter, ducting and silencer plus exhaust duct, silencer and stack. Options such as multi-stage inlet filtration, pulse-jet cleaning, anti-icing, air inlet chilling and water or steam injection for power augmentation are not included.
- Auxiliaries. Lube oil system (pump, cooler, etc), vibration monitoring, compressor washing, speed and temperature instrumentation, automated digital controls, typically including variable speed operation (for two-shaft designs), and fire protection systems.

Market factors. Estimated prices do not apply to large multi-unit orders (usually with phased delivery) where buyers gain bargaining leverage to negotiate sizeable discounts.

Four amazing advantages of Solar Gas Turbine Engines

Gasoline—any kind.

Diesel oil

Kerosene.

Natural gas.

The Jupiter is completely portable—saves weight and space.

❶ Uses whatever fuel you've got!

Solar gas turbines can operate on almost any available fuel—fuel that costs the least for *your* particular operation. Located in remote areas, for instance, self-sufficient Solar turbines can take fuel directly from a gas pipeline! This often results in lower total operating costs.

❷ Light—500 hp in 1/5 the space!

Solar's 500 hp Jupiter® engine is only one-fifth the size of a diesel of similar horsepower—and weighs *forty times less!* The entire unit is easily transported to remote locations. And it is especially suited to applications where space limitations create a troublesome installation problem.

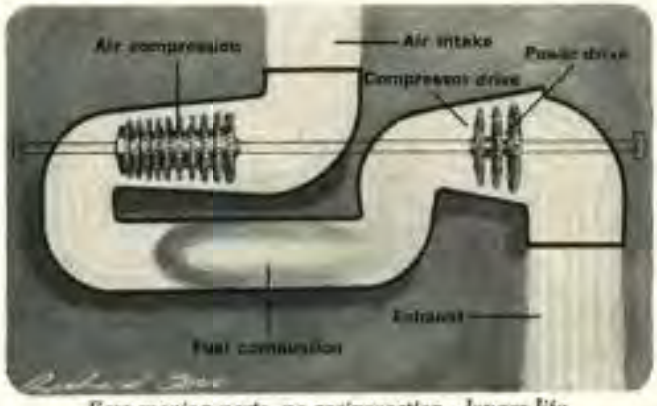

Few moving parts, no reciprocation—longer life.

Instant acceleration—takes full load without laboring.

Instant emergency power.

Starts in any climate.

❸ Simple design—low maintenance!

Gas turbines are the simplest of all heat engines. In operation, large volumes of air are drawn in by the compressor, mixed with fuel in the combustion chamber, greatly expanded, and delivered to a turbine which produces shaft power. Routine servicing can be completed in a few hours at most. Overhauls are infrequent. Simple design and low maintenance make gas turbines ideal for a wide range of important applications—including boat propulsion, portable power generation, air compression and chemical processing. And other applications for these versatile power plants of the future are limited only by the imagination.

❹ Starts instantly—no warm-up!

Solar gas turbines can be turned on or shut down in seconds. And they require no warm-up—even after long periods of stand-by service. No matter what your business, no matter what your power needs, these amazing advantages can benefit you. Write to Dept. D-151 for free gas turbine brochure.

SOLAR
AIRCRAFT COMPANY
SAN DIEGO
DES MOINES

2200 PACIFIC HIGHWAY • SAN DIEGO 12, CALIFORNIA