IAGT
Industrial Application of Gas Turbines

IAGT 2015 SYMPOSIUM

www.iagtcommittee.com

Oct 19-21, 2015, Banff, Alberta

OPTIMIZING THE BALANCE OF PLANT FOR A CYCLING COMBINED CYCLE OTSG FACILITY

By
Vito Raponi / Innovative Steam Technologies

Presented at the 2015 Symposium on Industrial Application of Gas Turbines (IAGT)
Banff, Alberta, Canada - October 2015

Overview: Typical Steam/Condensate Loop Components

- ST Condenser Hotwell
- Condensate Extraction/Forwarding Pumps
- Condensate Polisher
- Boiler Feedwater Pumps
- Boiler
- Steam Turbine (ST)
- Steam Condenser
- ST Bypass to Condenser

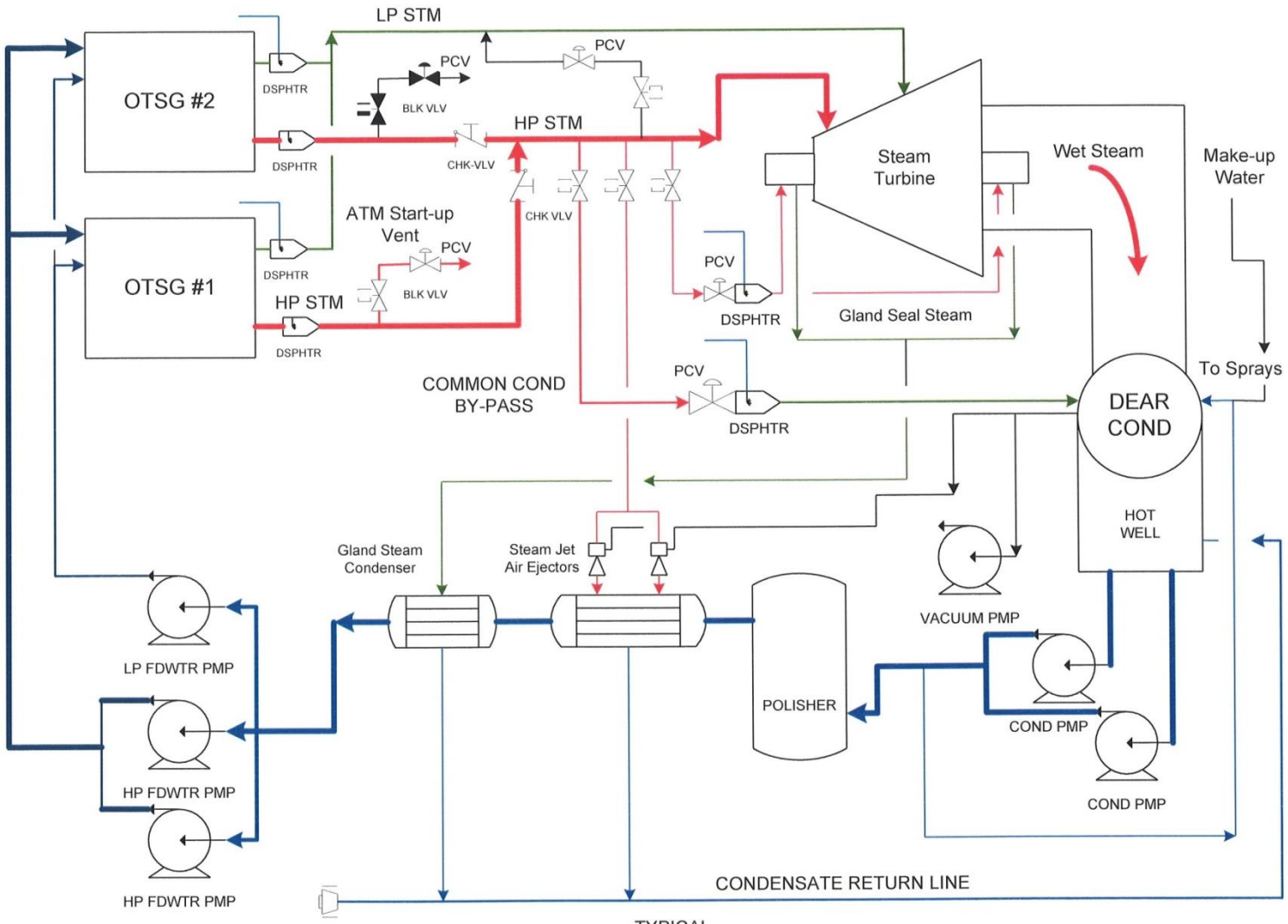

TYPICAL
PLANT CONFIGURATION

Steam Turbine & Condenser Operation

Vacuum and gland-seal steam overview

Condenser Vacuum

- ST Condenser operates under vacuum to increase shaft horsepower from the ST
- Vacuum helps maintain water chemistry
  - O_2 and CO_2 removal per Henry's Law
- Low pressure & high temperature drive off O_2 and CO_2 that are dissolved in the water

Gland Seals & Steam-Jet Air Ejectors

- Gland Seals maintain vacuum on ST rotor shaft at casing penetration
- Steam produced in HRSG (or Auxiliary Boiler) is used
- Steam-Jet Air Ejectors continuously remove air (i.e. O_2) that leaks into condenser
  - Used in combination with Liquid-Ring Vacuum pump

Deaeration

- In most OTSG CCPP's, deaeration is done inside ST Condenser
- ST Condenser operation alone drives O_2 levels down (~20 ppb)
- Alternatively, Vacuum Deaerators or Pressurized Deaerators are also commonly used

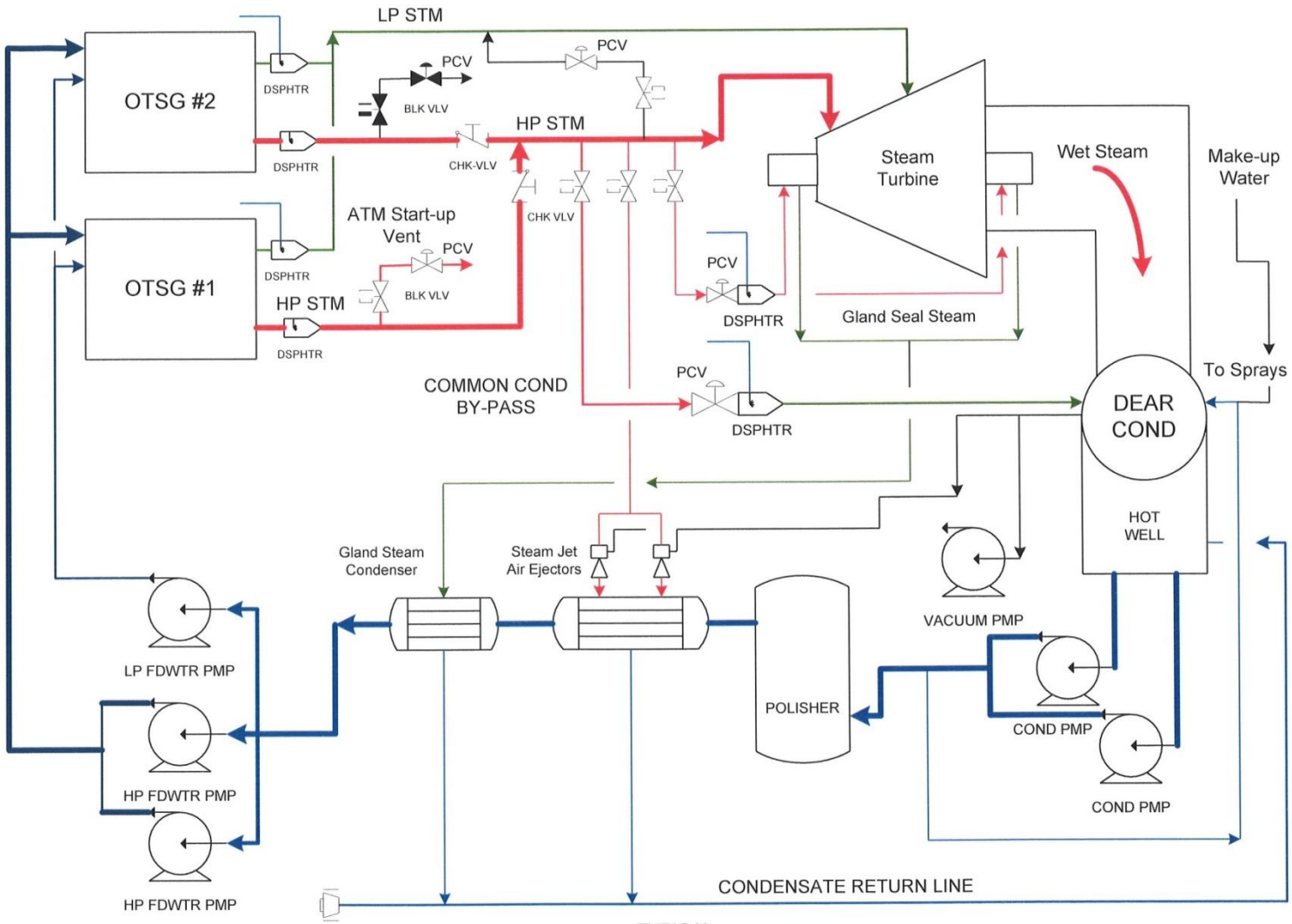

TYPICAL
PLANT CONFIGURATION

KEY POINT

- To keep condensate loop closed, the following are necessary:
  1. Continuous source of steam for gland seals until full load is achieved
  2. Maintain vacuum on ST Condenser to sustain acceptable water chemistry

- **CCPP's operate best when operated continuously, however…**

Cyclic Power Plant Operation Off-Peak Choices

1. Break closed condensate loop vacuum and shut everything down

2. Maintain only ST gland-seal steam (from an aux boiler) which will keep closed condensate loop under vacuum and the ST condenser in operation

3. Slow roll ST using an auxiliary steam source

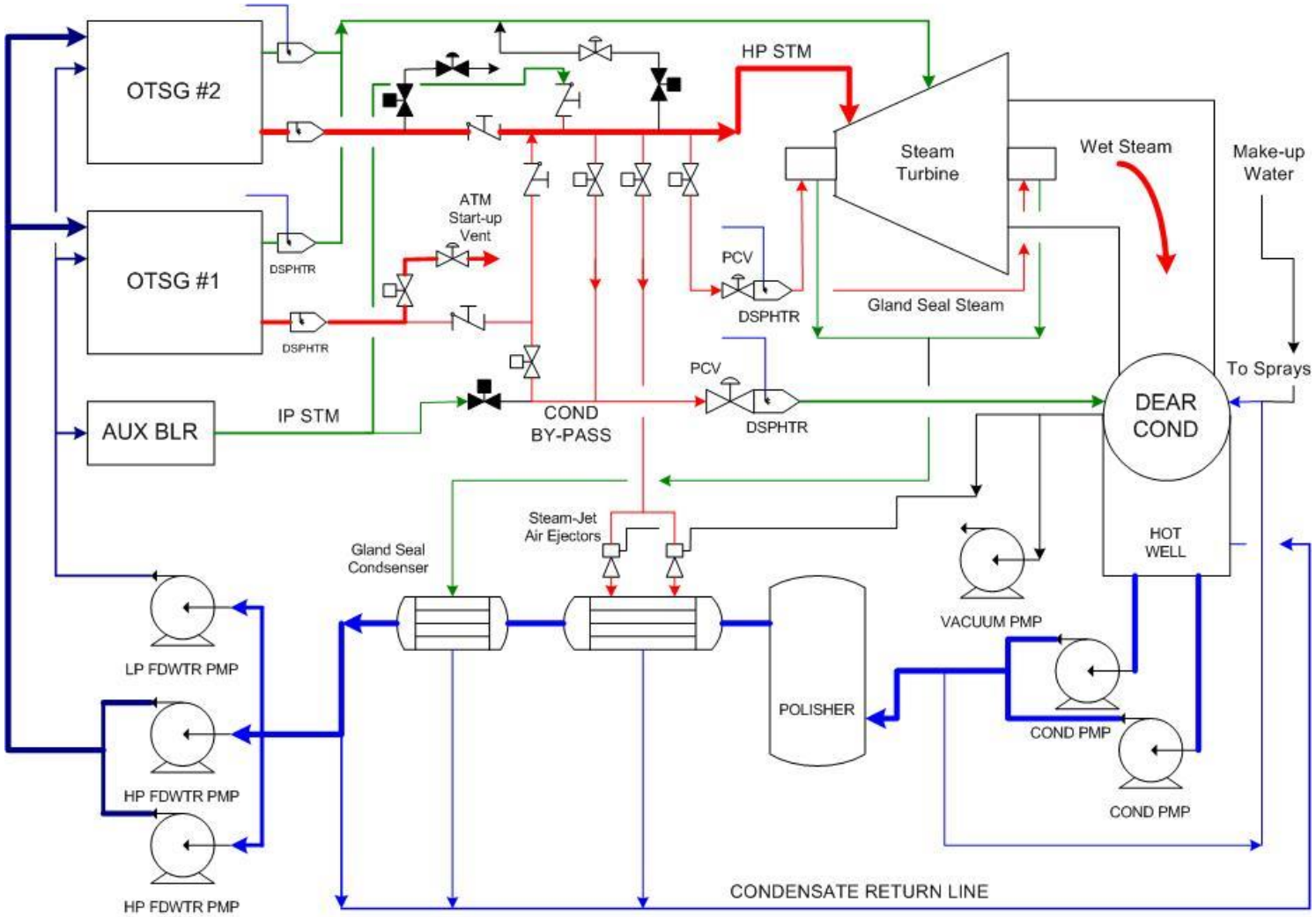

OPTIMAL OTSG CC PLANT CONFIGURATION

Breaking Condensate Loop Vacuum

Breaking Condensate Loop Vacuum

- If there is no auxiliary steam source for gland seals, then condenser vacuum must be broken during off-peak shutdowns
- Air ingress causes dissolved oxygen (DO) levels to rise out of specification, and stay that way on re-start
  - This is a significant corrosion risk to system components in a daily cycling plant
- Air ingress causes flash rusting (hematite blooming) on all exposed carbon steel surfaces (TDS/TSS)
  - Condenser Hotwell, Deaerator, Flash Tank
  - High TDS/TSS throughout loop

Dissolved Oxygen (DO) Operational Considerations

Dissolved Oxygen – Expert's Opinion

- *"One of the most frequently encountered corrosion problems (in boilers) results from exposure of metals to dissolved oxygen."* – The NALCO Guide to Boiler Failure Analysis.

- EPRI and other sources recommend DO levels be kept below 10-ppb (e.g. 5-7 ppb) for systems containing mixed metallurgy. The Heat Exchanger Institute (HEI) uses 7-ppb as the design standard for Steam Surface Condensers.

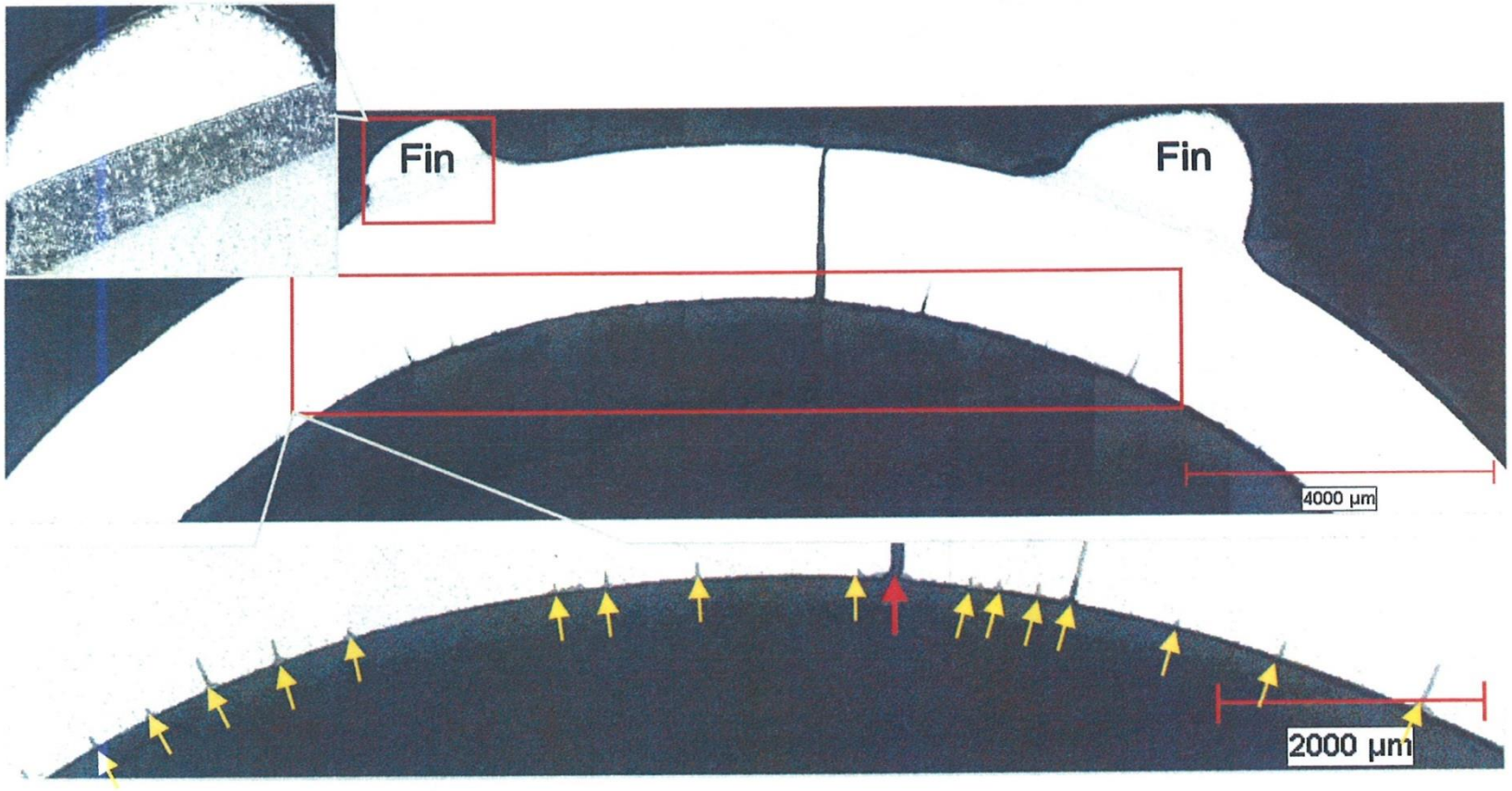

Figure 8: Micrographs takrn from the prepared section marked "B-B" in Figure 1 before etching, illustrating cross-sectional view of the main crack (red arrow) and numerous smaller cracks (yellow arrows) observed along the inner surface (Not etched). The inset illustrates the brazing weld and the fins (etched).

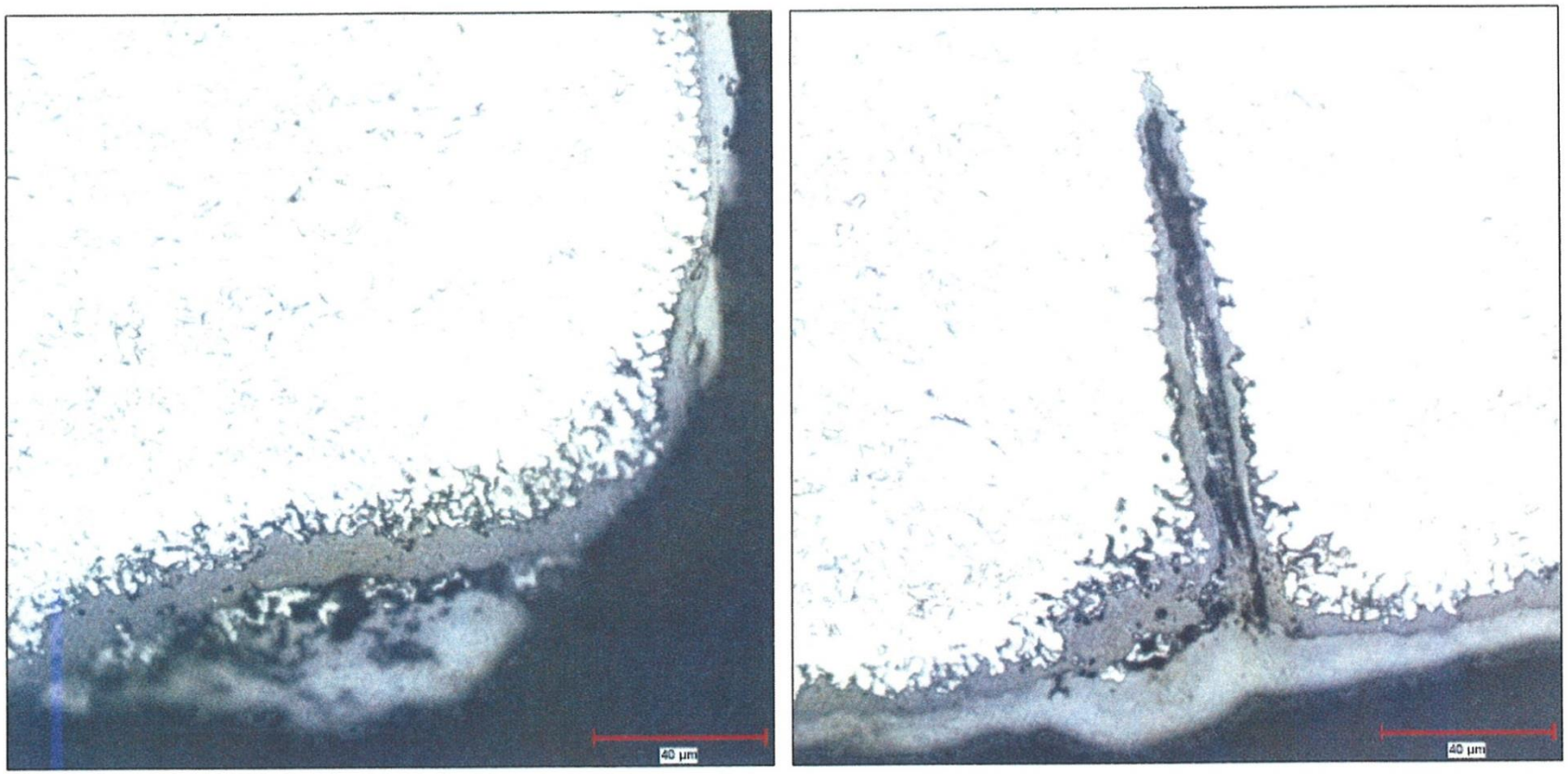

Figure 11: Locally enlarged micrographs taken from the main crack and one of the smaller cracks shown in Figure 8 after etching, illustrating bright grains adjacent to the oxide layers along the cracks. (Original magnification: 500x. Etched with 10% ammonium persulfate electrolytic etchant)

Iron Oxide (Rust) Formation

Operational considerations of high TDS/TSS from Hematite Blooming and associated iron transport

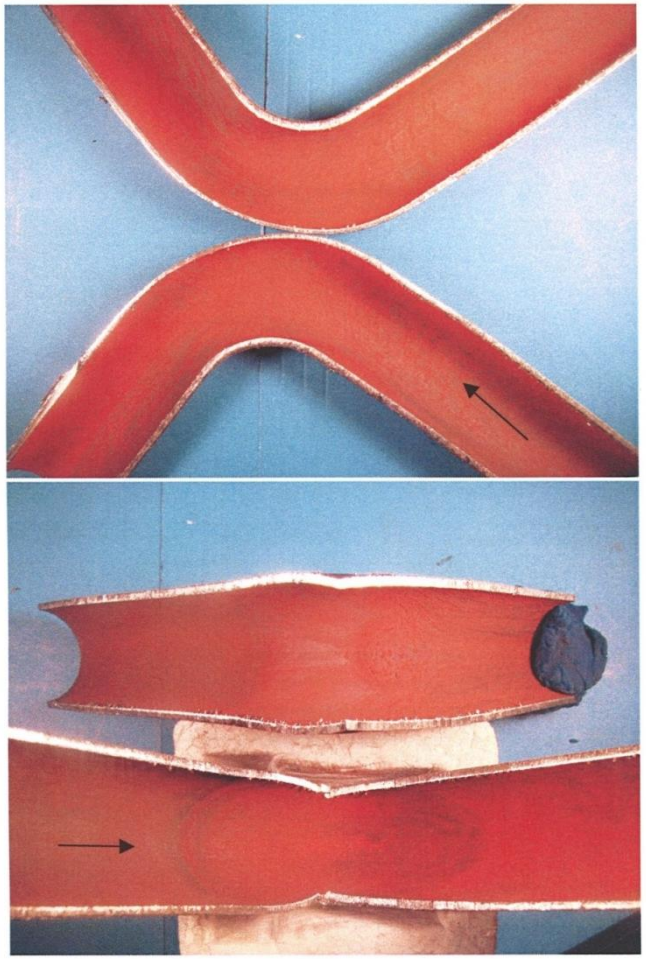

Tube : #5
Fig. 23 & 24 Photomacrographs illustrate the watermarks on the I.D. surface in the bend sections. The arrows highlight the suspected direction of flow (0.6X, Section into halves)


ROW 4 TUBE 21
22 Feb 12
09:18

Ten years of operation

Consequences of Breaking Condensate Loop Vacuum

- Increased polisher loading & cost of polisher operation due to high TDS from iron transport
- Increased make-up water costs due to venting on start-up & dumping bad water
- Slower plant start-up due to re-established of water quality when closed condensate loop is brought back into service (and subsequently the steam turbine)

Why break vacuum then?

Cost Considerations of Maintaining Vacuum Off-Peak

Breaking Condensate Loop Vacuum - Advantages

- There is no energy cost penalty for shutting down the plant internals at night while off the grid
- The plant may be able to operate with reduced (or no) staff overnight, resulting in additional cost savings
- This will be a cheaper plant to build from a capital cost standpoint

Operating Cost Considerations for Maintaining Vacuum

- Must run the Auxiliary Boiler overnight to provide steam to the ST gland seals and the Condenser steam-jet air evacuators
  - Natural Gas (heat energy)
- Must run the Condensate Forwarding Pumps, LP feedwater pump (Auxiliary Boiler), and Condenser Cooling-Water pumps or Air Cooled Condenser fans
  - ~400-500 hp
- Must also consider operator/personnel costs

Capital Cost of Auxiliary Steam Sources

- A package boiler capable of producing 20 kpph of steam at 225 psig & 420°F is approximately $200K CAD
  - Gland seal steam: 400-800 lb/hr for 30 MW STG
  - ST slow roll: ~20 kpph for 30MW STG
- Some CCPPs are part of larger process plants where auxiliary steam sources may be readily available
  - Can be brought into power plant with cost-effective 2”-3” diameter carbon steel piping

Keeping Condensate Loop Closed - Advantages

- Will allow the fastest possible CCPP start-up (1 hour or less is achievable)
- Decreased equipment life-cycle maintenance costs (e.g. less corrosion, cyclic-fatigue cracks, pressure part replacements, plant downtime, etc.)
- Reduced polisher operating costs (reduced iron transport & longer polisher-train run times)
- Lowest possible make-up water costs (minimal venting losses during start-up)

Financials (revenue for Fast-Start)

- Electricity prices (Ontario) = $0.07/kW-hr off-peak and $0.12/kW-hr peak
- 1-Hr/dy of extra peak steam cycle operation in a typical 2x1 CCPP by slow rolling ST (125MW, 30MW for the STG) = [30,000 kW-hr x $0.12] x 365 = $1.314M/yr.
- Factor in lower polisher and make-up water operating costs as well as substantially reduced high-DO-related maintenance costs
- Estimated additional earnings per year to close loop = ~$1.4M/yr

Financials (cost for ST slow-roll)

- Aux Boiler NG fuel = ~$0.25/m^3 0R $0.00733/ft^3
- NG Cost/yr = 25 mmBTU/hr x $0.00733/ft^3 x 8hr / 1020 BTU/ft^3
- NG Cost/yr = [$1437/dy x 365-dy/yr] = $524,505/yr

- Pump Electricity cost = [**400**+60+100]hp x 1.341kW/hp
- Pump Electricity cost = 751 kW x 8-hr x 0.07/kW-hr x 365
- Pump Electricity cost (off peak) = $153,504/yr

- Operator cost = $100/hr*8hr*365days = $292,000/yr

- Estimated cost/yr to close loop = ~$0.97M/yr.
- Compared to estimated additional earnings per year to close loop = ~$1.4 -1.5M/yr

Financials (cost for gland seal steam only)

- Aux Boiler NG fuel = ~\$0.25/m^3 0R \$0.00733/ft^3
- NG Cost/yr = 5 mmBTU/hr x \$0.00733/ft^3 x 8hr / 1020 BTU/ft^3
- NG Cost/yr = [\$287.5/dy x 365-dy/yr] = \$104,920/yr

- Pump Electricity cost = [**100**+60+100]hp x 1.341kW/hp
- Pump Electricity cost = 751 kW x 8-hr x 0.07/kW-hr x 365
- Pump Electricity cost (off peak) = \$71,266/yr

- Operator cost = \$100/hr*8hr*365days = \$292,000/yr

- Estimated cost/yr to close loop = ~\$0.47M/yr.
- Compared to estimated additional earnings per year to close loop = ~\$0.7M/yr (assume 30 min faster start)

Ways to Reduce Parasitic Load Cost

- NG fuel prices are less than electricity costs
  - Use steam-jet air ejectors for maintaining vacuum instead of electric (liquid ring) vacuum pumps (preferred by plant designers)
- Use lower horsepower Cooling-Water bypass pump (e.q. 40 hp vs 500 hp) to maintain night-time circulation and cooling loop chemistry
- Incorporate a VFD on the Cooling-Water pump motor
- Use a small impulse ST to drive some of the parallel pumps (less common in CCPPs)

CCPP Configurations

Optimized for OTSG

Plant	Auxiliary Boiler	HP ST/Condenser By-Pass	LP ST/Condenser By-Pass	HP Start-Up Vent	LP Start-Up Vent	HP Desuper heater	LP Desuper heater	Plant Type
Plant 1	Y	Y, Common	Y, Common	Y	N	Y	N	Peaking
Plant 2	N	Y, Common	Y, Common	Y	Y	Y	Y	Peaking
Plant 3	Y	N	N	Y	Y	Y	N	Peaking
Plant 4	N	Y, Dedicated	Y, Dedicated	N	N	N	N	Peaking
Plant 5	Y	Y, Dedicated	Y, Common	Y	N	Y	N	Peaking
Plant 6	Y	Y, Dedicated	Y, Dedicated	N	N	N	N	Peaking
Plant 7	Y	Y, Dedicated	Y, Dedicated	N	N	N	N	Base/ Peaking
Plant 8	N	Y, Dedicated	Y, Dedicated	N	N	N	N	Base
Plant 9	Y	Y, Dedicated	N/A	N	N/A	Y	N/A	Peaking
Plant 10	N	Y, Dedicated	N	Y	N	Y	N	Peaking
Plant 11	Y	N	N	Y	N	Y	N	Base/ Peaking
Plant 12	N	Y, Common	N/A	Y	N/A	Y	N/A	Base
Plant 13	N	Y, Common	Y, Common	Y	Y	Y	N	Base
Plant 14	N	Y, Common	Y, Common	Y	N	Y	N	Peaking
Plant 15	N	Y, Dedicated	Y, Dedicated	N	N	Y	Y	Peaking
Plant 16	N	Y, Common	Y, Common	Y	Y	Y	Y	Base/Peaking
Plant 17	N	Y, Dedicated	Y, Dedicated	Y	N	Y	Y	Peaking

Summary

Optimal Steam Loop BoP

- Maintain Condensate Loop Vacuum
  - Include an Auxiliary Boiler in the plant design
- ST- Condenser should be spec'd for part load operation
  - Increased condensate sub-cooling, increased O_2 absorption
  - Greater air ingress forces larger pumps
- Dedicated ST Condenser By-passes
  - Steam/condensate loop remains operational upon ST trip
  - OTSG start-up directly into steam distribution system

Optimal Steam Loop BoP

- LP Desuperheaters
  - Required for fast-start of LP steam system
- Atmospheric Start-Up Vents
  - Required if no dedicated ST Condenser by-pass
- Auxiliary Boiler with HP-to-LP Letdown station
  - ST rotor can be kept hot and spinning during overnight shutdown
  - LP steam distribution system can be pressurized for quicker start-up

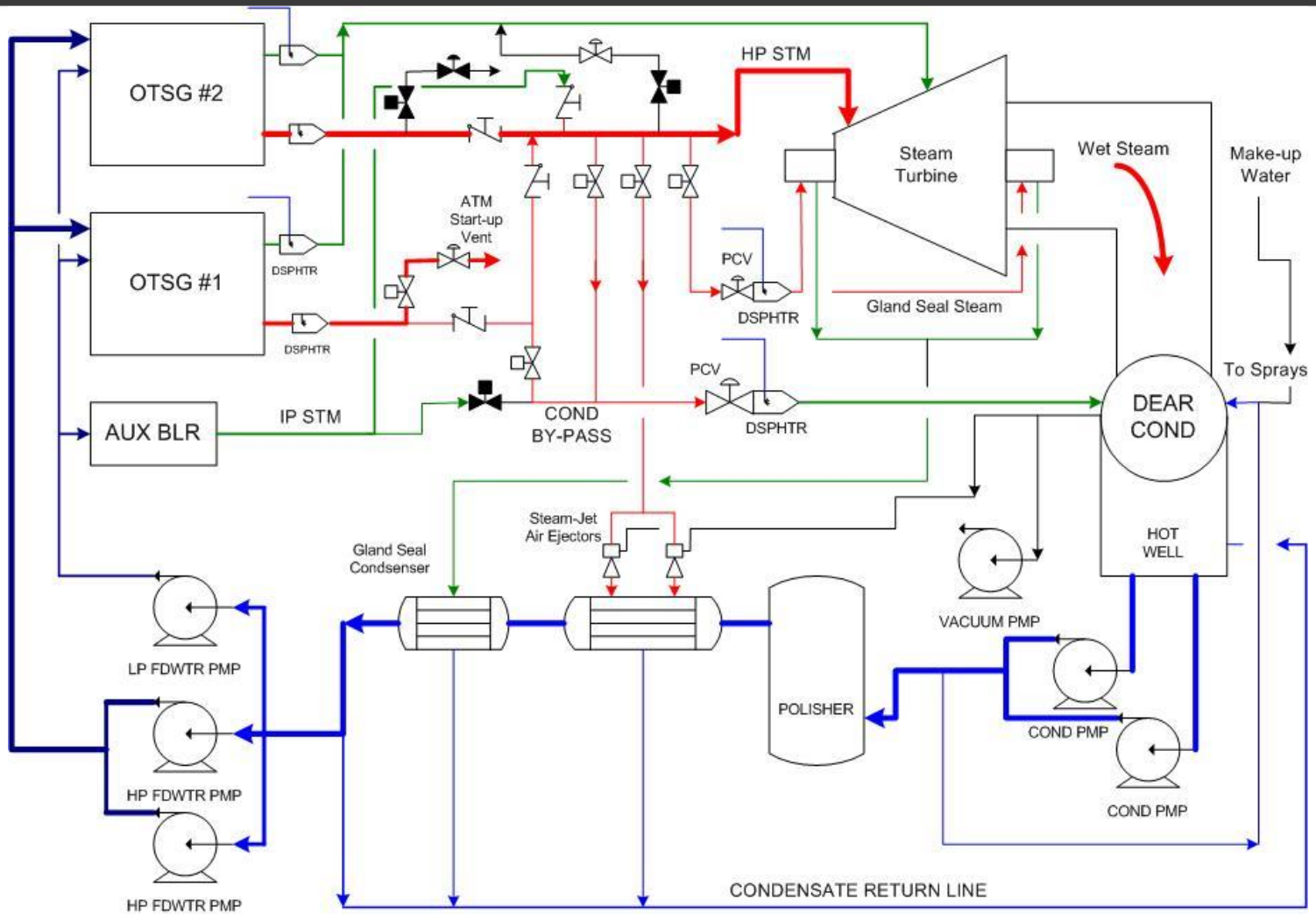

OPTIMAL OTSG CC PLANT CONFIGURATION

Questions?